No.01

Oki Data CONFIDENTIAL

MICROLINE 3990 FLATBED PRINTER Maintenance Manual

[Rev. 3]

Related drawings

Drawing No.	Name
41128650TL	MICROLINE 3990 FLATBED Disassembly for Maintenance
41128650TR	MICROLINE 3990 FLATBED RSPL

*1 : The 2nd version of this manual was issued on Jan. 30, 2003, only the format having been change on May 14, 2004.

*2 : The first version of this manual was prepared and distributed on April 22, 2002.

BOM		Use for		Certification Body	
Rev	Date	DCO No.	Contents	Design	Approval
2	2004-05-14	HP9-0007	Change format *1	Tomoyo Sugiyama	Akio Kikuchi
3	2009-01-27	SG2-0025	Addition of “Warning”, etc.	Tomoyo Sugiyama	Yoshinori Fujisawa

Approval Akio Kikuchi	Design Tomoyo Sugiyama	Name MICROLINE 3990 FLATBED Maintenance Manual
Check Yoshinori Fujisawa		
Date 2004-05-14 *2	Oki Data Corporation	Drawing No. 41128650TH

Revision History Table

Rev.No.	Date	Corrected items			Person in charge
		No.	Page	Description of change	
1	2002-04-22			ISSUE	ODS Yamamoto
2	2003-01-30			Change of the Maintenance Manual number.	ODS Sato
3	2009-01-27		20, 24	Addition of “Warning”, etc.	EP5 T. Sugiyama

PREFACE

This manual describes the method for maintaining MICROLINE 3990 FLATBED for mechanics. For handling and operating the device, please refer to the “Instructions Manual”.

CAUTION!

- Copying the entire contents or a portion of the document without permission is prohibited.
- The contents of this manual may be modified in connection to improvements applied to the device or to the contents with no advanced notice.

TABLE OF CONTENTS

1. CONFIGURATION 7

1.1 Standard Configuration 7
1.2 Optional Configuration 7

2. PERIODICAL INSPECTION 8

2.1 Parts to Inspect 8

3. PARTS FOR PERIODICAL REPLACEMENT 9

4. CLEANING 10

4.1 Cleaning the Sensors 12
4.2 Cleaning the Linear Scale 12

5. LUBRICATING 13

6. MAINTENANCE TOOLS 19

7. REPLACING PARTS 20

7.1 Cautions Upon Replacing Parts 20
7.2 Removing and Reinstalling Parts 21
7.2.1 Top cover, side cover (L), side cover (R), rear cover 21
7.2.2 Lifting and lowering the printer unit 22
7.2.3 Control unit 23
7.2.4 Power Unit 24
7.2.5 Fan assembly (power) 25
7.2.6 AG sensor board 26
7.2.7 AG motor assembly 27
7.2.8 LF motor assembly 28
7.2.9 Mini pitch belt (LF) 29
7.2.10 Hopper pulse motor 30
7.2.11 Space motor 31
7.2.12 Operation board 32
7.2.13 Ribbon guide 33
7.2.14 Print head 34
7.2.15 Ribbon protector assembly, paper width sensor (L), (R) 35
7.2.16 Ribbon feed assembly 36
7.2.17 Linear scale 37
7.2.18 Linear sensor assembly 38
7.2.19 Space belt 39
7.2.20 I/F circuit board (MIF board) 40
7.2.21 Continuous/Cut-sheet sensor board 41
7.2.22 Platen 42
7.2.23 Sprocket assembly (L), (R) (front tractor) 43
7.2.24 MTR circuit board (relay board) 45
7.2.25 Continuous/Cut-sheet switch motor 46
7.2.26 Cover open sensor assembly 47
7.2.27 EI sensor assembly 48
7.2.28 Head fan assembly 49
7.2.29 LCD bracket assembly 50
7.2.30 CSF sensor assembly 51
7.2.31 SP motor fan 52

7.2.32 Stage open sensor assembly ... 53
7.2.33 CSF paper detection sensor ... 54
7.2.34 Rear tractor gear assembly ... 55
7.2.35 Middle frame bracket (R) assembly ... 56
7.2.36 Rear sensor bracket assembly ... 57
7.2.37 Removing the printer unit ... 58
7.2.38 Front PE sensor assembly ... 60
7.2.39 Front sensor bracket assembly ... 61
7.2.40 Head cable assembly ... 62

8. ADJUSTMENT ... 63

8.1 Adjusting the Line Feed Belt ... 64
8.2 Adjusting the Line Feed Belt (For rear tractor) ... 65
8.3 Setting the Dip Switch ... 66
8.4 Confirming the Gap Between the Platen and Block ... 67
8.5 Correcting the Amount for Auto Paper Weight Adjustment ... 68
8.6 Adjusting the Paper Start Position Upon Auto-Loading ... 69
8.7 Adjusting the Paper Cut Position ... 71
8.7.1 Adjusting in the front tractor method ... 71
8.7.2 Adjusting in the rear tractor method ... 73
8.8 Adjusting the Horizontal Print Position ... 75
8.9 Adjusting the Line Feed Pitch for Cut-Sheets ... 76
8.10 Adjusting the Skew Sensor ... 77
8.11 Adjusting the Sensors ... 78
8.11.1 Sensor check ... 78
8.11.2 Slice level learning function of sensors ... 79
8.11.3 Confirming the voltage level of sensors ... 80

9. MAINTENANCE TEST ... 81

9.1 Selecting the Test Mode ... 81
9.1.1 Local mode start switch ... 81
9.1.2 Menu ... 83
9.1.3 Switch function ... 101
9.1.4 Menu setting print list ... 104
9.1.5 Default setting of function setting ... 104
9.1.6 Default setting of all menus ... 104

10. TROUBLESHOOTING PROCEDURES ... 105

10.1 Procedures for Analyzing Problems ... 106
10.2 Procedures for Repairing ... 108
10.2.1 Power-related abnormalities ... 109
10.2.2 Reset circuit abnormalities ... 111
10.2.3 Alarm display ... 112
10.2.4 Operation board abnormalities ... 113
10.2.5 Paper feed abnormalities ... 115
10.2.6 Carriage movement abnormalities ... 121
10.2.7 Ink ribbon feed abnormalities ... 123
10.2.8 Print head movement abnormalities ... 124
10.2.9 Interface abnormalities ... 125
10.2.10 Abnormalities in auto paper weight adjusting movement ... 126
10.2.11 Other non-recoverable alarms ... 127

11. MAINTENANCE PARTS ... 129

12. DESCRIPTION OF OPERATIONS 131

12.1 Summary 131
12.2 Circuit Operation 133
12.2.1 μCPU (Q7) and peripheral circuits 133
12.3 Mechanical Operation 136
12.3.1 Mechanism and operation of the print head 136
12.3.2 Space mechanism and operation 138
12.3.3 Ribbon feed mechanism and operation 139
12.3.4 Mechanism of the head gap adjustment 140
12.3.5 Paper feed operation 143
12.3.6 Mechanism of the paper end detection 147

1. CONFIGURATION

1.1 Standard Configuration

This device is configured from the following parts.

1) Side covers (L) & (R), top cover, rear cover, front cover
2) Printer unit
3) Power unit
4) Control unit
5) Operation unit assembly
6) Lower cover assembly

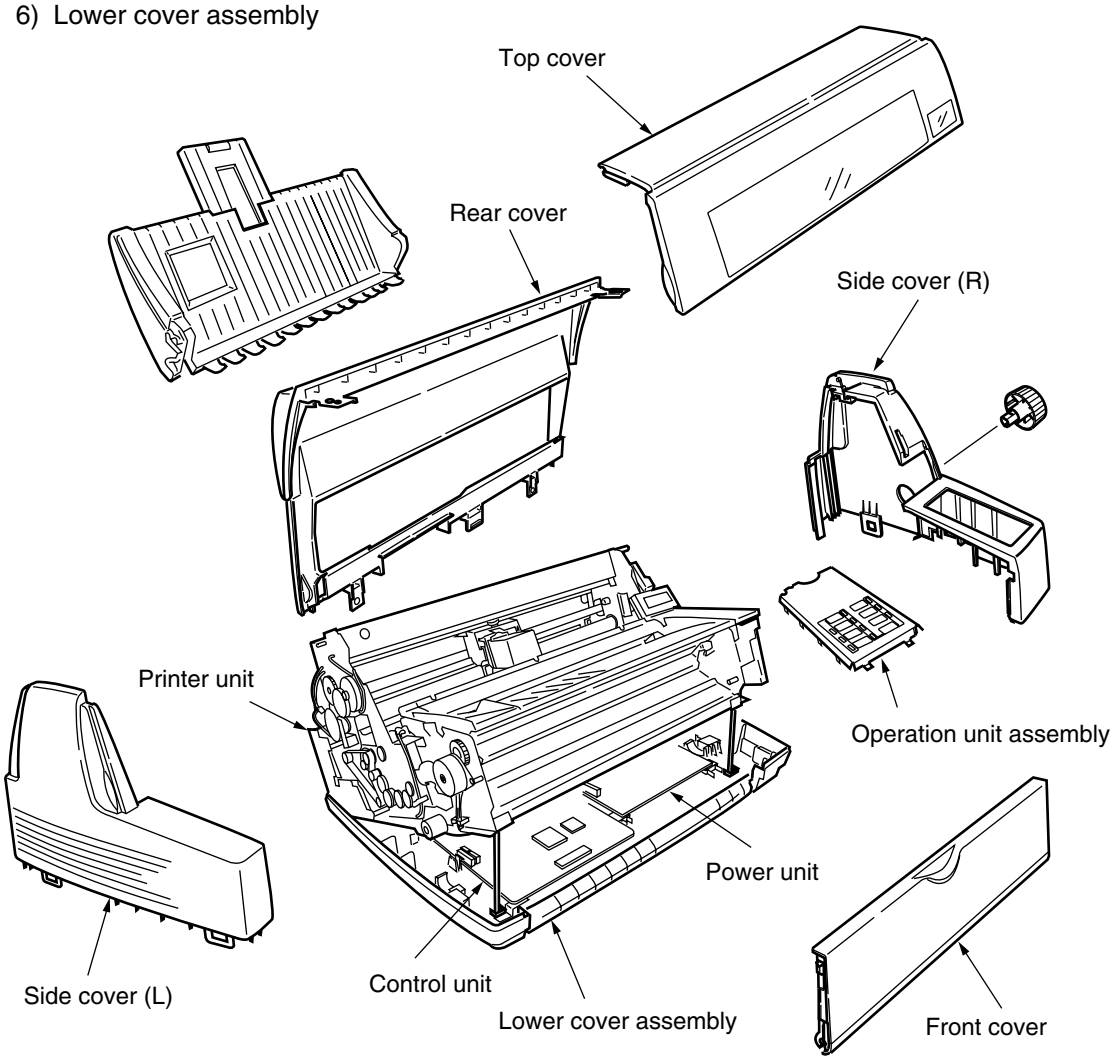

1.2 Optional Configuration

1) Cut-sheet feeder
2) Rear tractor feeder

2. PERIODICAL INSPECTION

By conducting maintenance periodically according to the instructions indicated below, the device can be used effectively for a longer period of time and the average breakdown interval will also be elongated.

1) Period: The earlier of six months or 300 hours of operation.
2) Applied tools: Maintenance tools listed in Chapter 6.

★ As this device is highly reliable and has a long interval for lubrication, periodical inspection can be omitted according to the used condition (duty, environment, etc.). However, inspection, lubrication, and cleaning of each part is required when repairing the device.

2.1 Parts to Inspect

Table 2-1

Parts	Inspection Method	Procedures When Abnormal
1) Loose screws in each section	Visually and by using a screw driver	Secure the screws.
2) Stretched space belts	1) The swing of the belt should not be significant. (Visual) 2) Confirm the alignment of printed data.	Adjust by loosening the screws securing the idle pulley bracket.
3) Worn ribbon protectors	The center hole should not be abnormally worn out. 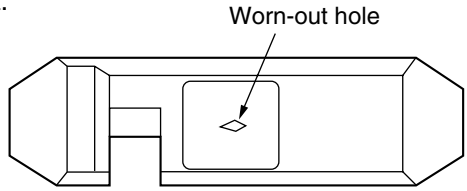 	Exchange the ribbon protector. (See Section 7.2.15)
4) Line field belt	1) The swing of the belt should not be significant. (Visual) 2) Confirm the line-feed pitch.	Adjust by loosening the screws securing the tension pulley. (See Section 8.2)

3. PARTS FOR PERIODICAL REPLACEMENT

The parts listed below must be replaced periodically.

Table 3-1 Parts for Periodical Replacement

No.	Parts	Parts No.	Interval for Replacing [Hrs. indicate actual operating hours]
1	Ribbon cartridge (Mono color)	40017303	Pica size draft ANK 10 million characters
2	Ribbon protector	41373601	approx. 2000 hrs.
3	Print head	41015501	200 million dots/pin
4	Space motor	41139201	approx. 2500 hrs.
5	Platen	41151201	ANK 100 million characters

4. CLEANING

CAUTION!

- Be sure that the power is turned OFF when cleaning.
- Be sure that paper dust, etc. does not go in the mechanical sections.
- After cleaning lubricated parts, be sure to lubricate the parts again.

Clean the inside of the printer periodically according to the items listed below.

Period:	The earlier of six months or 300 hours of operation.
Required Time:	Approx. 15 min.
Applied tools:	Dry cloth (soft cloth such as gauze), brush, cotton swabs, and vacuum cleaner.
Sections to clean:	According to Table 4-1.

Table 4-1 Sections to Clean

Sections to Clean	Cleaning Method
Carriage shaft and its periphery	Eliminate paper dust and wipe away filth, dust, ribbon dust, etc.
Sides of the slide beam	
Running surface of paper	
Front PE sensor Front (skew) sensor Rear PE sensor CSF paper detecting sensor Table paper detecting sensor	Wipe away dust formed on sensors with a brush or cotton swab.
Linear scale	Wipe away dust formed on the scale with a brush or cotton swab.

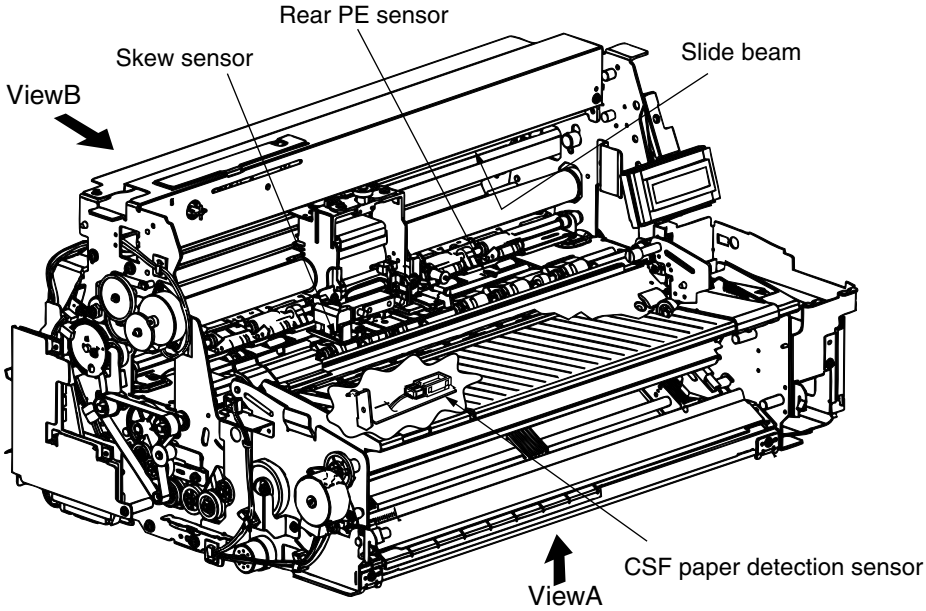

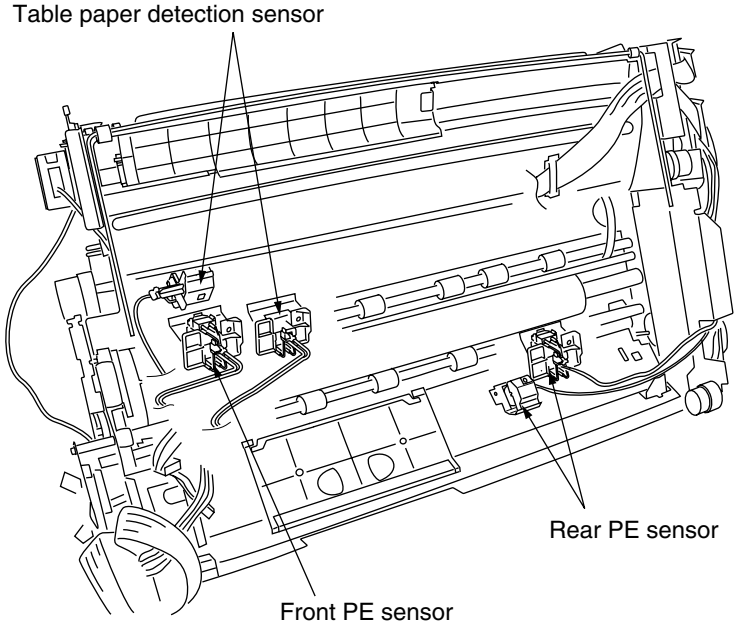

ViewA Bottom surface of the printer

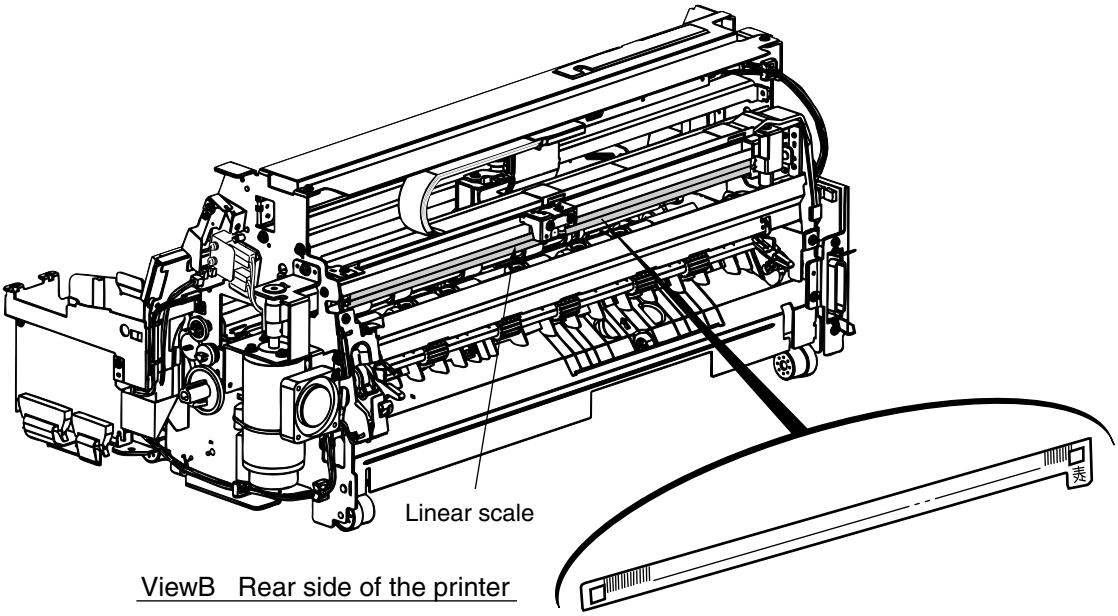

ViewB Rear side of the printer

4.1 Cleaning the Sensors

1) Cleaning the front PE sensor, front (skew) sensor, and rear PE sensor
   a) Wipe the sensors with cotton swabs from the platen side of the upper sheet guide.

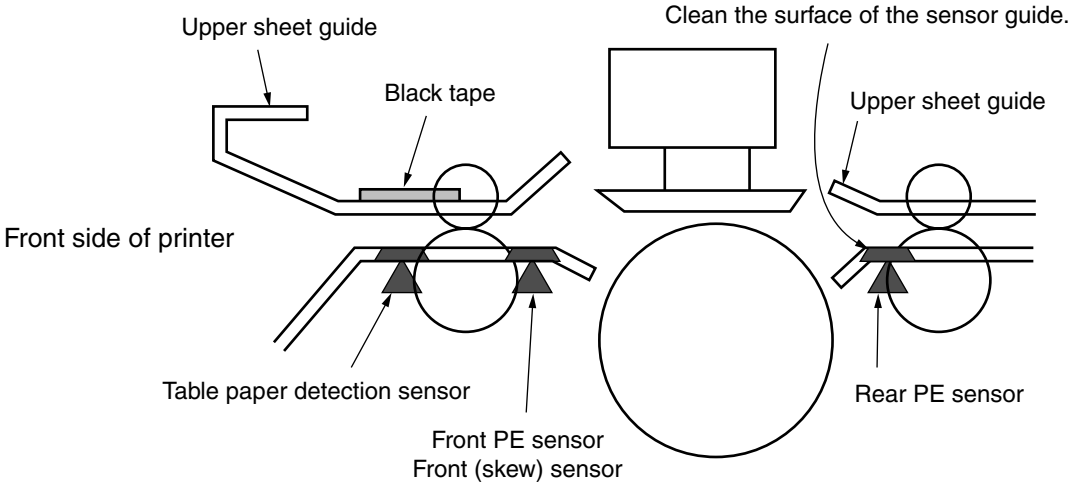

2) Cleaning the table paper detection sensor
   a) Flip the black tape and check the sensor.
   b) Wipe the sensor with a cotton swab from the platen side of the upper sheet guide.\

3) Cleaning the CSF paper detection sensor
   a) Remove the stage assembly. (See Section 7.2.33)
   b) Remove the sensor from the bracket.
   c) Wipe the sensor with a cotton swab.

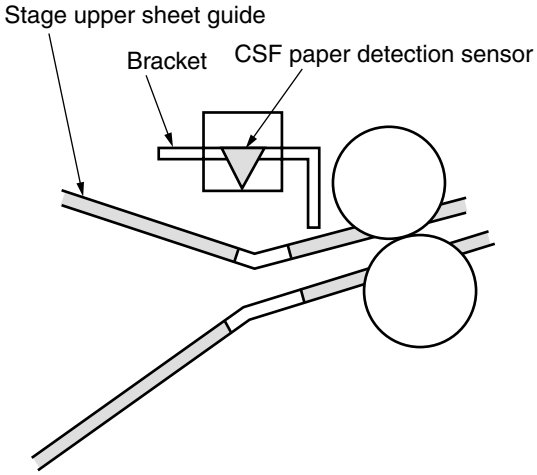

4.2 Cleaning the Linear Scale

Cleaning the linear scale
   a) Remove the cover. (See Section 7.2.1)
   b) Wipe the scale with a brush or cotton swab.

5. LUBRICATING

Lubricate according to the following items.

1) Period

The earlier of one year or 600 hours of operation. (Only those marked with an asterisk) The others are maintenance-free devices and lubrication is not required while being used, however, it is required when disassembling and reassembling the device, or when cleaning or exchanging the lubricated parts.

2) Grease types

- Pan Motor Oil 10W-30 (equivalent product of Nippon Oil) ..... PM
- Albania Grease #2EP (equivalent product of Showa Shell Oil) ... GEP
- Mori Coat EM-30L (Dow Corning) ..... Mori coat

3) Amount of grease

- Large amount .....Ⓐ... Apply sufficiently
- Normal amount ...Ⓑ... Approx. 3 to 4 drops of oil or 0.2mm of grease
- Small amount .....Ⓒ... Approx. 1 drop

4) Parts that cannot be lubricated

Table 5-1 Parts The Cannot Be Lubricated

No.	Prohibited Parts	Reason
1	Ink ribbon	To prevent smeared print
2	Sensors	To prevent dust from forming
3	Platen (rubber portion)	To prevent dirtied paper
4	Feed roller (rubber portion)	To prevent dirtied paper
5	Pin tractor	To prevent dirtied paper
6	Mini pitch belt	To prevent rubber from deteriorating or stretching
7	Head cable assembly	To prevent cables from snapping
8	Print head	To prevent faulty movement of the print head
9	Micro switch	To protect contacts
10	Auto gap disk	To prevent dust from forming
11	Linear scale	To prevent dust from forming

5) Parts to lubricate

Lubricate the parts indicated in the following figures.

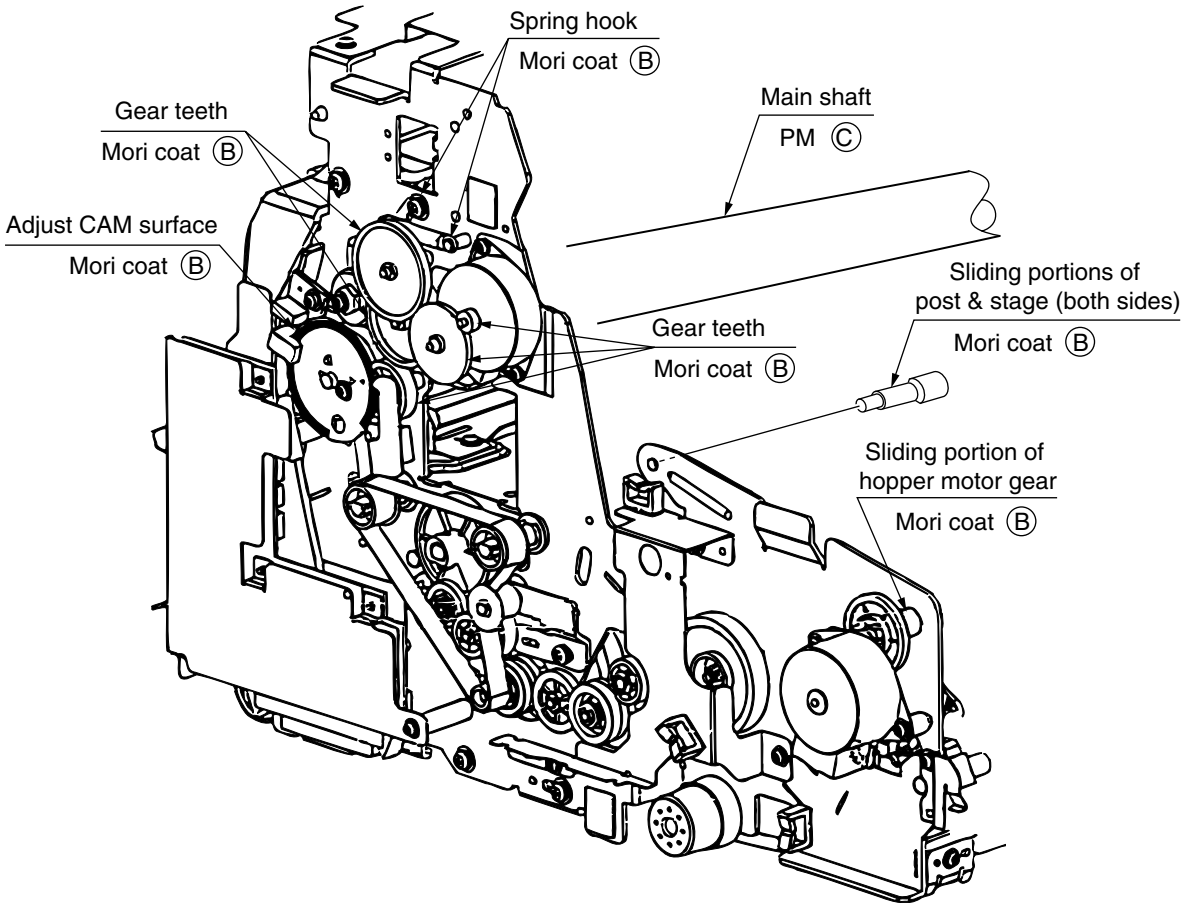

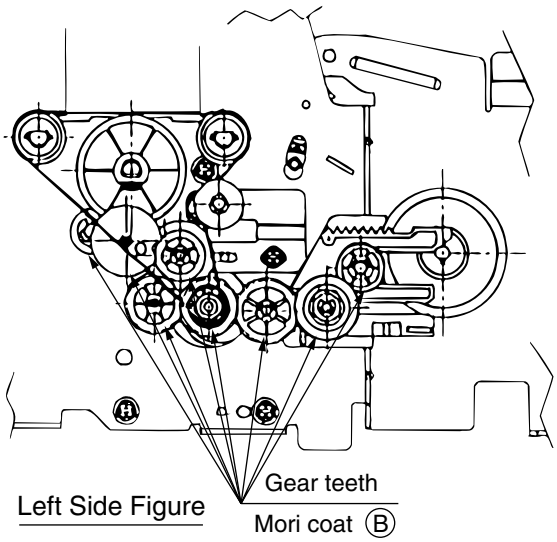

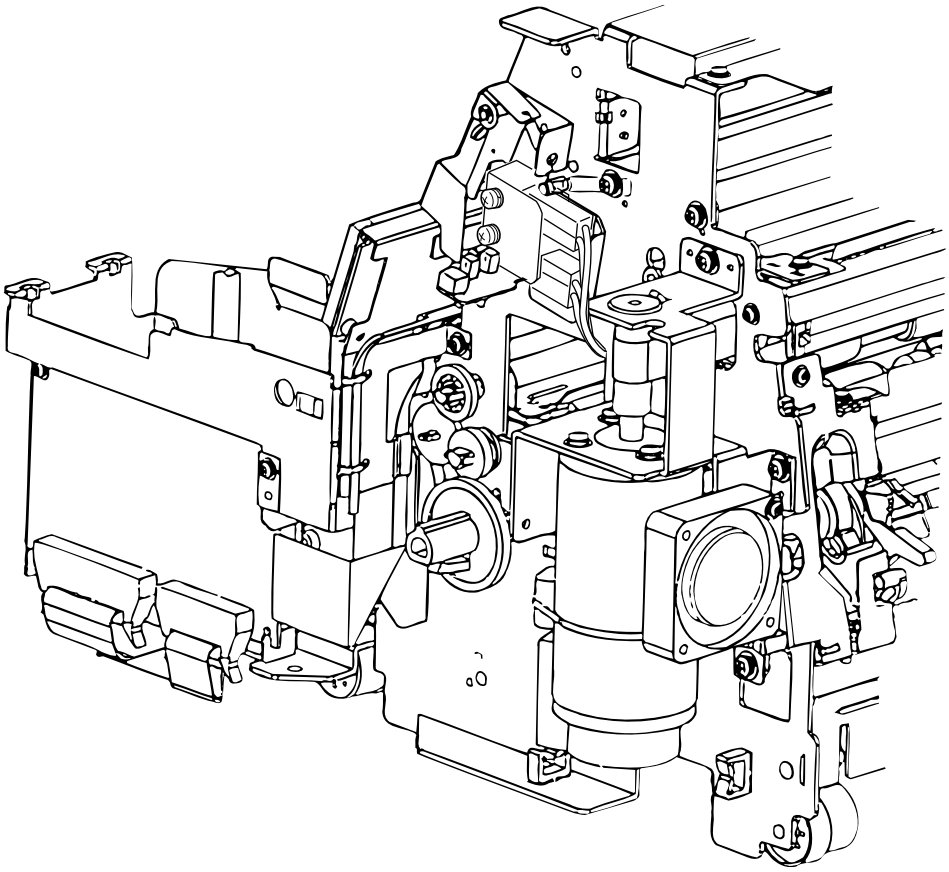

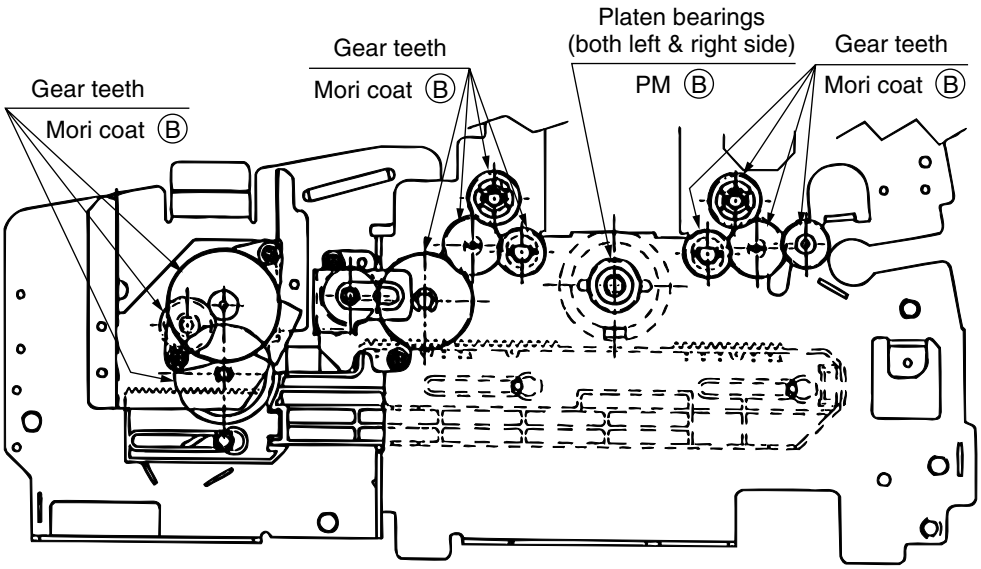

Right Side Figure

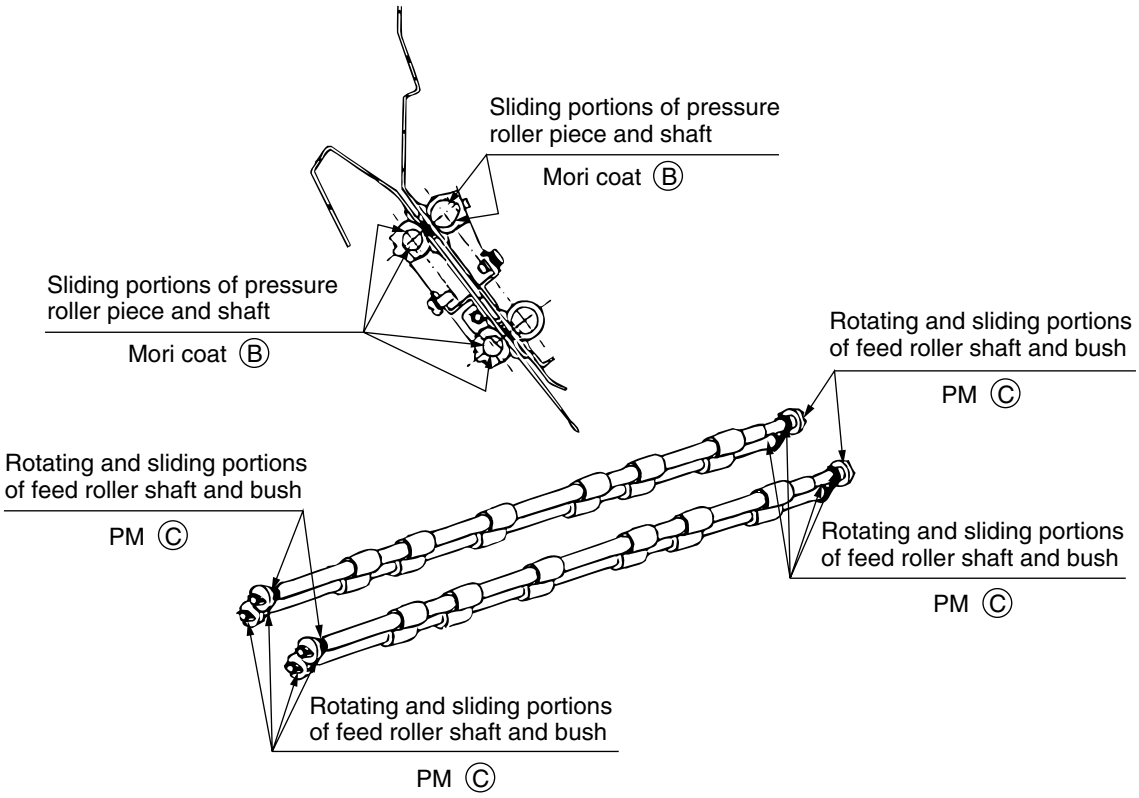

Stage Unit

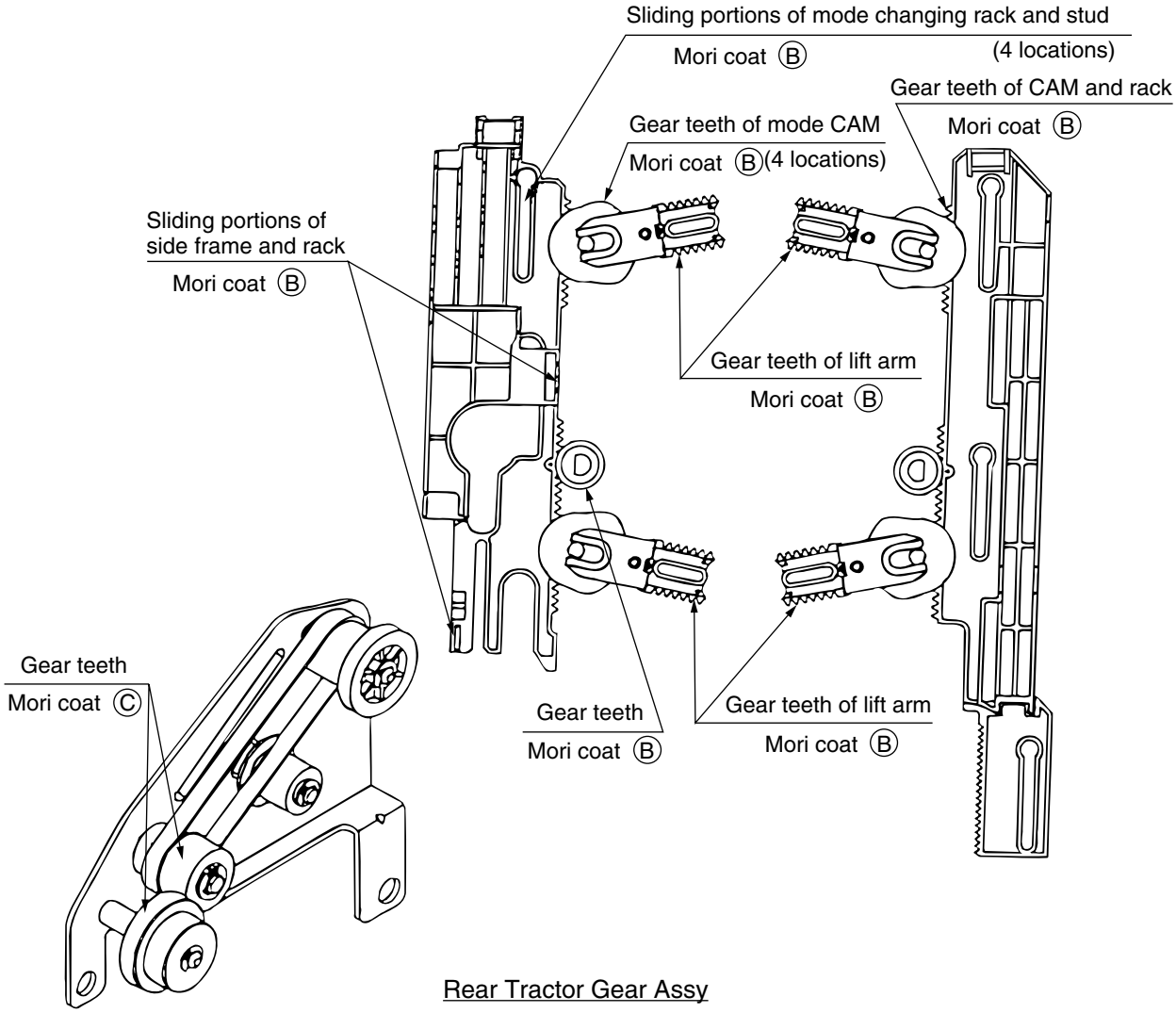

Rear Tractor Gear Assy

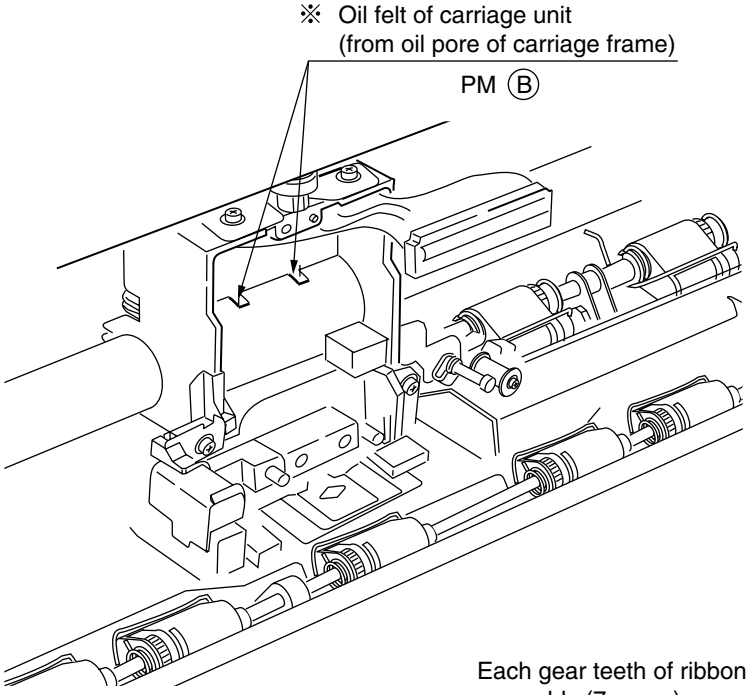
※ Oil felt of carriage unit
(from oil pore of carriage frame)
PM Ⓑ

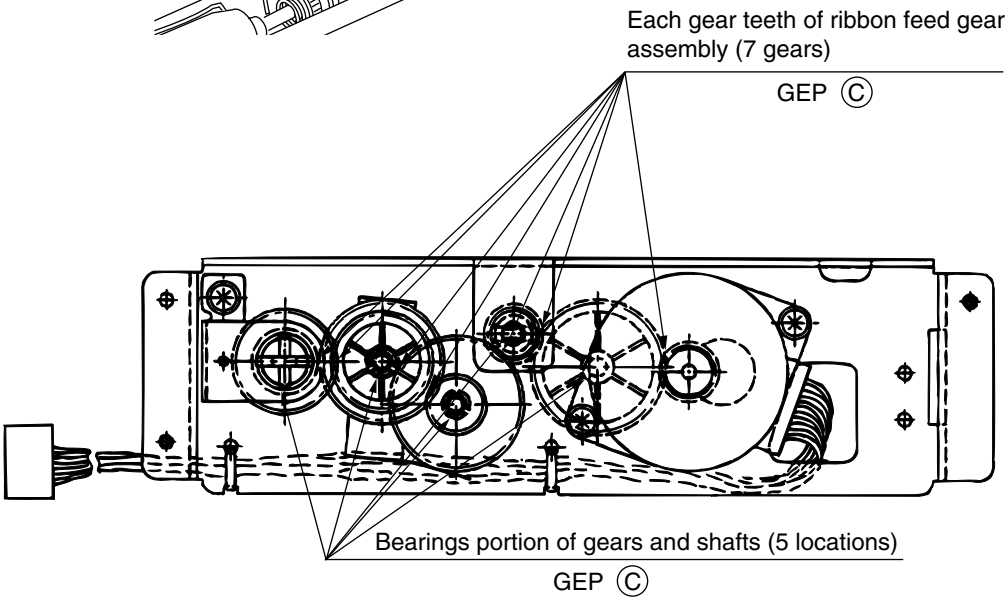
Each gear teeth of ribbon feed gear
assembly (7 gears)
GEP Ⓒ
Bearings portion of gears and shafts (5 locations)
GEP Ⓒ

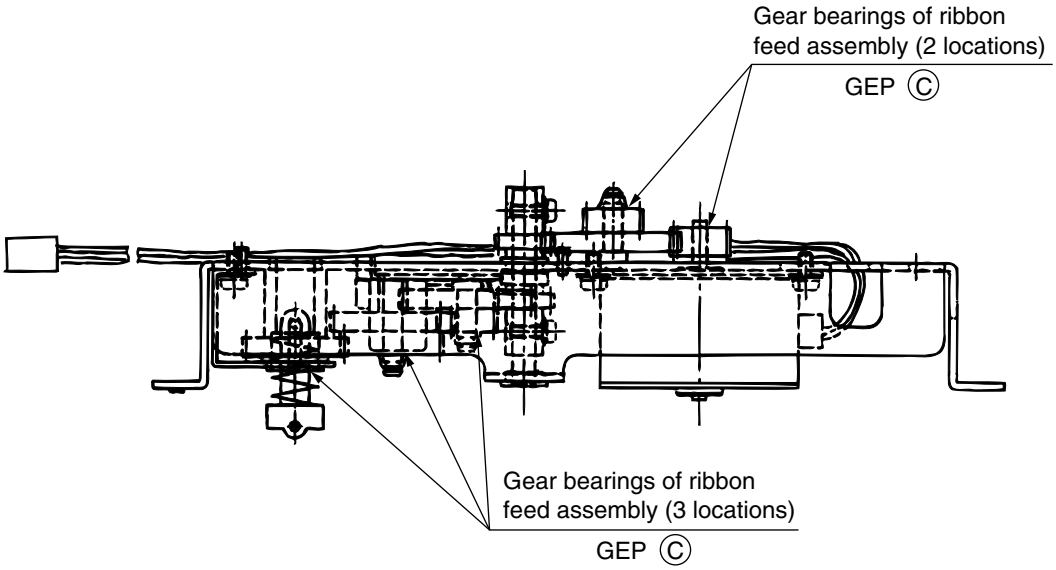
Gear bearings of ribbon
feed assembly (2 locations)
GEP Ⓒ
Gear bearings of ribbon
feed assembly (3 locations)
GEP Ⓒ

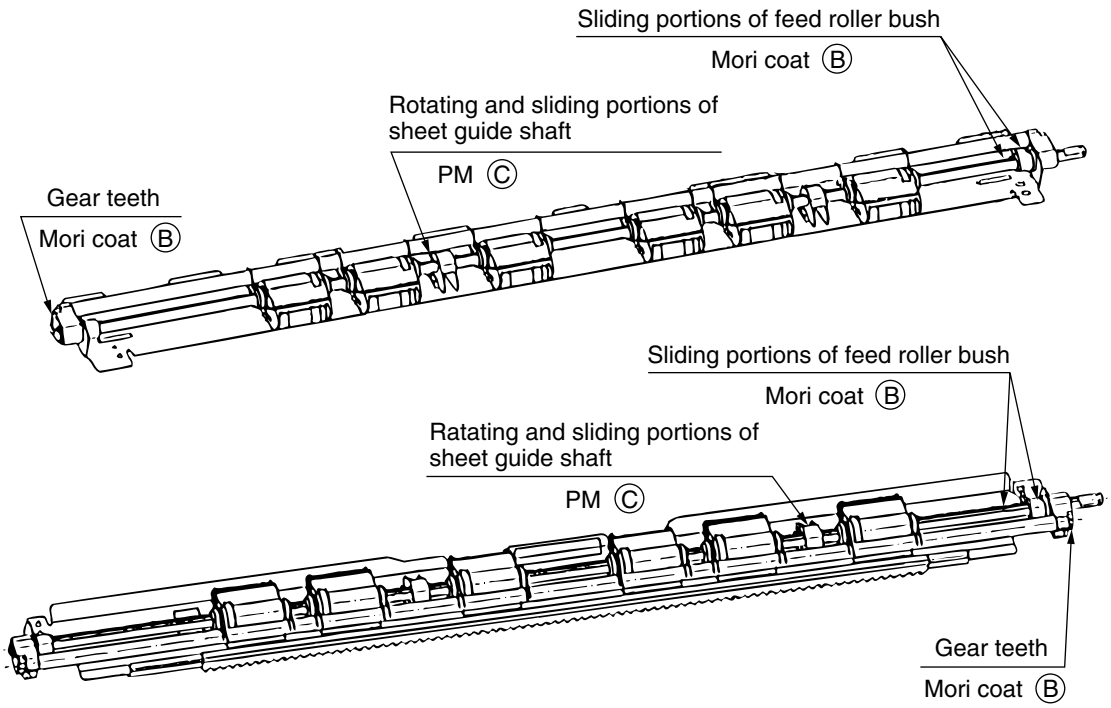

Feed Roller Assembly

6. MAINTENANCE TOOLS

Tools required for replacing parts of the print circuit board and unit are listed in Table 6-1.

Table 6-1 Maintenance Tools

No.	Maintenance Tools	Q'tity	Applied parts	Remarks
1	No.1-100 Phillips screwdriver	1	2~2.6mm screws	
2	No.2-100 Phillips screwdriver	1	2~2.6mm screws	
3	No.2-200 Phillips screwdriver	1	2~2.6mm screws	
4	5-200 screwdriver	1	2~2.6mm screws	
5	200 flat blade screwdriver	1	2~2.6mm screws	
6	Spring hook	1		
7	Thickness gauge	1	2~2.6mm screws	
8	No.3 round-tip pliers	1		
9	No.5 nippers	1		
10	Tester	1		
11	Sutabi Phillips screwdriver	1		
12	500gr bar-type pressure gauge	1		
13	Vernier caliper	1		
14	Precise screwdriver #3	1	Blade width 2mm	
15	Lock tight 241	1		Capable of dissolving adhesive for locking screws (equivalent product of Nippon Lock Tight)

7. REPLACING PARTS

7.1 Cautions Upon Replacing Parts

1) Turn OFF the power, pull the AC plug out of the outlet, and disconnect the AC cable and interface cable from the printer before detaching the parts.

⚠Warning	Risk of electric shock	⚠

There is a risk of electric shock during replacement of the power supply.

Use insulating gloves or avoid direct contact with any conducting part of the power supply, and caution should be exercised during replacement.

The capacitor may take one minute to complete discharge after the AC cable is unplugged. Also, there is a possibility that the capacitor doesn't discharge because of a breakage of the PCB, etc., so remember the possibility of electric shock to avoid electric shock.

2) Right after a print job, turn OFF the power and wait five minutes before commencing the task as the print head may be extremely hot.
3) If paper, a ribbon cartridge, or cut-sheet feeder is attached to the printer, remove them before commencing the task.
4) After replacing the parts or inspection, be sure to check that there are no abnormalities in the connections of connectors before turning the power ON.
5) Do not disassemble when the printer is operating normally.
6) Determine the range of disassembly according to the objective and do not disassemble more than required.
7) Use designated maintenance tools.
8) Disassemble in the specified order or else damages may be applied to the parts.
9) Small parts such as screws and collars are easy to lose, therefore, reattach them temporarily to their original positions.
10) IC such as micro processors, ROM, and RAM are easily damaged by static electricity, therefore, do not wear gloves that easily builds static when handling the print circuit board.
11) Do not set the print board directly on the device or floor.
12) Sections Prohibited from being Disassembled:

The following parts or sections must not be disassembled as they cannot be reproduced.

Unit	Disassemble-prohibited Section	Contents
Print head	Print head	Print head main body
Printer unit	Space motor Ribbon pulse motor Auto gap motor Hopper pulse motor Continuous/cut-sheet switch motor LF motor	Motor main body
	De centered collar (L)/(R) (on adjust CAM)	De centered collar set screw (white paint section)
Carriage unit	Gap sensor (EI sensor assembly)	Gap sensor set screw

7.2 Removing and Reinstalling Parts

7.2.1 Top cover, side cover (L), side cover (R), rear cover

1) Remove the front cover ① and stacker assembly ②. (Remove the front cover ① by pulling it straight up.)
2) Remove the platen knob ③.
3) Remove the top cover ④. (Remove the top cover ④ by spreading it approx. 30 and pulling it toward the front.)
4) Remove the two screws ⑤.
5) Remove the two screw ⑥, remove the hook section ⑦ by pulling it away from the mechanical section, then lift and remove the rear cover ⑧.
6) Remove the hook section ⑨, remove (A) on the front, then carefully remove the side cover (R)⑩ by moving it in the direction of the arrow (upper direction).
7) Remove the hook section ⑪, remove (B) on the front, then carefully remove the side cover (L)⑫ by moving it in the direction of the arrow (upper direction).
8) Reassemble the parts in the opposite sequence to disassembling.

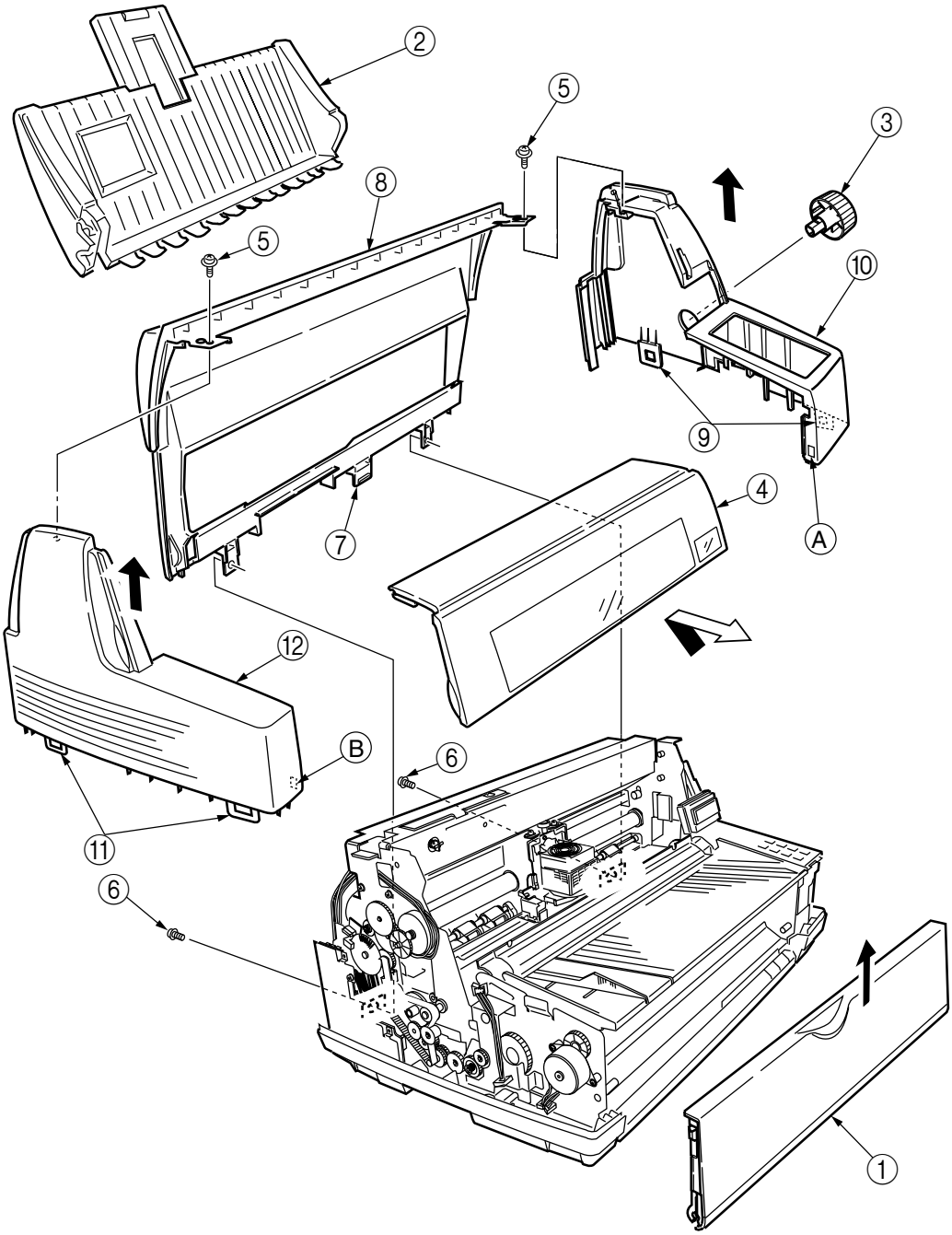

7.2.2 Lifting and lowering the printer unit

1) Remove the top cover, side cover (L), side cover (R), and rear cover. (See Section 7.2.1)
2) Remove the screw ② securing the printer unit ①, then remove the fixture metal ③ on the left.
3) Open the operator panel ④ and remove the screw ⑤. The fixture metal on the right is lifted with the printer unit, therefore, it cannot be removed.
4) Hold the posts on both sides, and lift the printer unit ① with the back side being the fulcrum. Other than the posts, hands can be placed beneath the operator panel ④ to lift or lower the printer unit.
5) Lift the stand shaft vertically and set it in the groove of the lower cover ⑦.

CAUTION!

Be sure to confirm that the stand shaft is securely set into the groove in order to support the printer unit ① with the stand shaft. When replacement of parts is performed under an unstable condition, the printer unit ① may fall off and lead to injuries.

6) Lower the printer unit in the opposite sequence to lifting.

(Precautions upon installing)

1. When lowering the printer unit ①, lower it slowly so that fingers or hands will not be caught by the brackets on both sides or the lower cover ⑦. Also be sure that connection cords or cables are not caught in between.

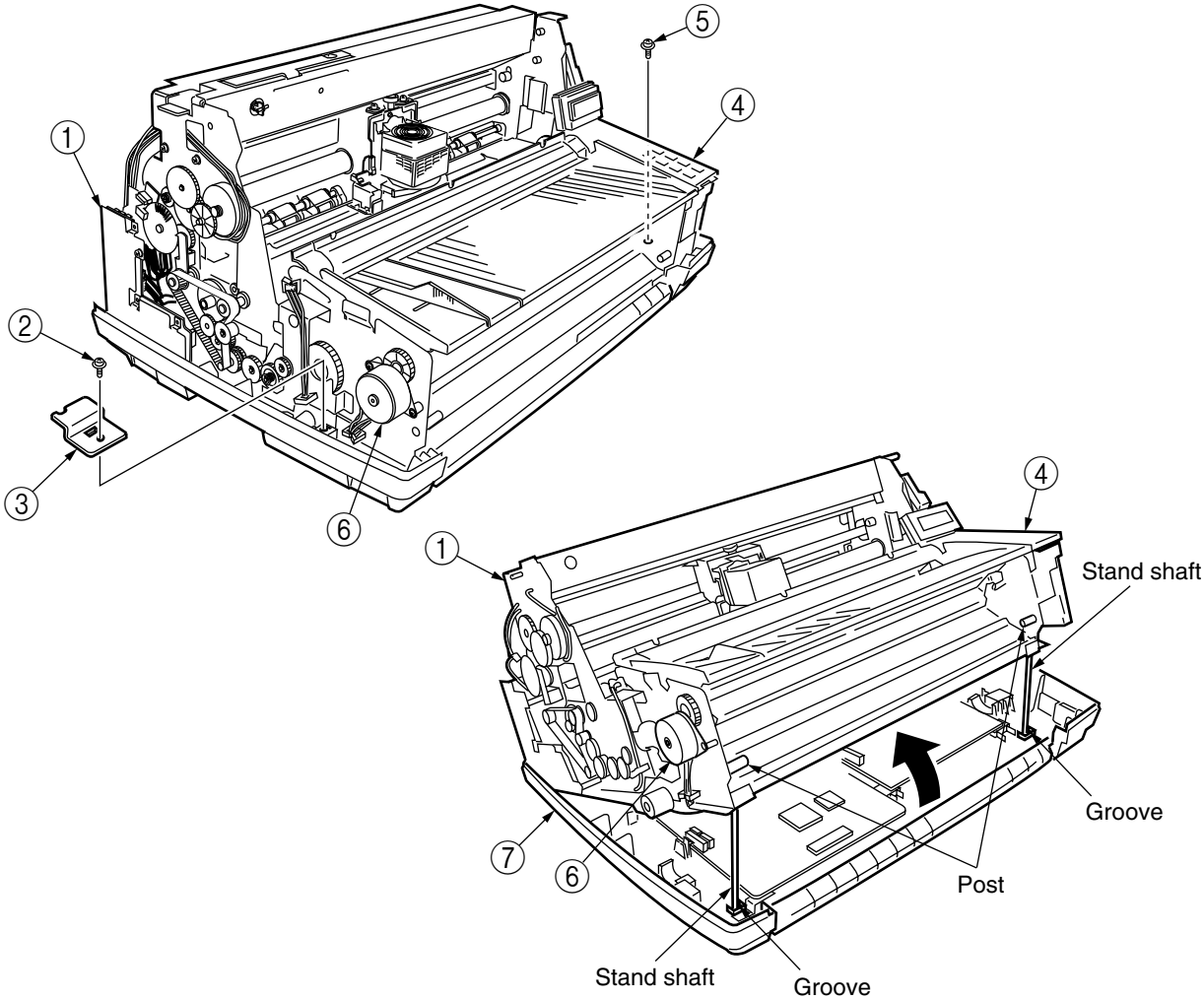

7.2.3 Control unit

1) Remove the top cover, side cover (L), side cover (R), and rear cover. (See Section 7.2.1)
2) Lift the printer unit. (See Section 7.2.2)
3) Disconnect all the cables connected to the control unit ①.
4) Remove the two screws ②, then remove the control unit ① by removing it from the claw portion (2 locations) of the lower cover.
5) Reinstall the control unit in the opposite sequence to removal.

(Precautions upon installing)

1. Be careful not to catch the connection cable under the control unit ①.
2. When reinstalling the control unit ①, slide it along the rail of the lower cover ③ and confirm that the unit is set in the hook portions (2 locations). (Set it in the claw portions.)
3. When replacing the control unit ①, remove the EEPROM of the old circuit board and set it in the new board.

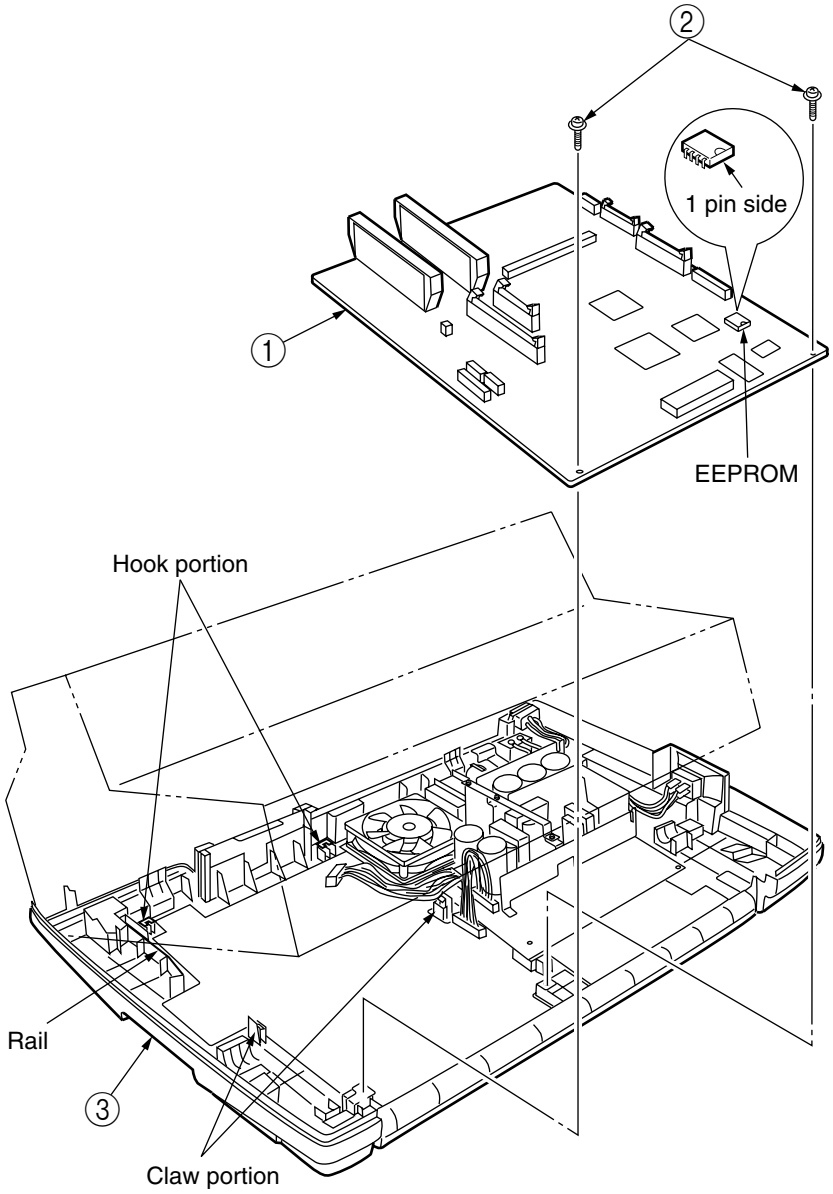

7.2.4 Power Unit

⚠Warning	Risk of Electric Shock	⚡

There is a risk of electric shock during replacement of the power supply.

Use insulating gloves or avoid direct contact with any conducting part of the power supply, and caution should be exercised during replacement.

The capacitor may take one minute to complete discharge after the AC cable is unplugged. Also, there is a possibility that the capacitor doesn't discharge because of a breakage of the PCB, etc., so remember the possibility of electric shock to avoid electric shock.

1) Remove the top cover, side cover (L), side cover (R), and rear cover. (See Section 7.2.1)
2) Lift the printer unit. (See Section 7.2.2)
3) Disconnect all the cables connected to the power unit ①.
4) Remove the screw ②, then remove the ground wire ③.
5) Remove the two screws ④.
6) Pull the power unit ① from the insert portion (4 locations) of the lower cover ⑤ toward you, then remove it from the claw portion.
7) Reinstall the power unit in the opposite sequence to removal.

(Precautions upon installing)

1. Install the power unit ① by setting it in the insert portion of the lower cover ⑤.
2. When removing the power switch, disconnect the connector and pull the power switch toward the outer side of the lower cover ⑤.

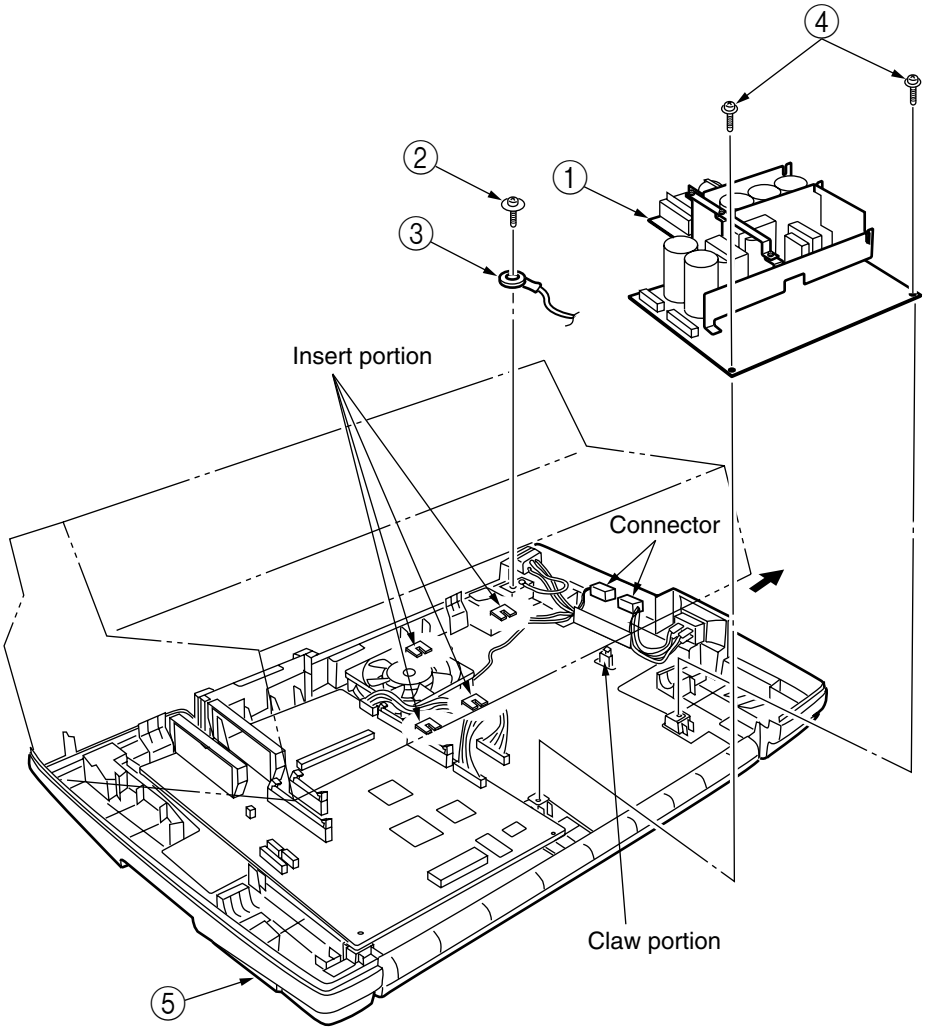

7.2.5 Fan assembly (power)

1) Remove the top cover, side cover (L), side cover (R), and rear cover. (See Section 7.2.1)
2) Lift the printer unit. (See Section 7.2.2)
3) Disconnect connection cord (FAN) connected to the power unit ①.
4) Remove the two screws ③, then remove the two bracket supports ⑤, wire-netted fan ⑥, and fan assembly ④.
5) Reinstall the fan assembly (power) in the opposite sequence to removal.

(Precautions upon installing)

1. Reinstall the fan so that the wind blows downward (in the direction of the arrow in the figure).

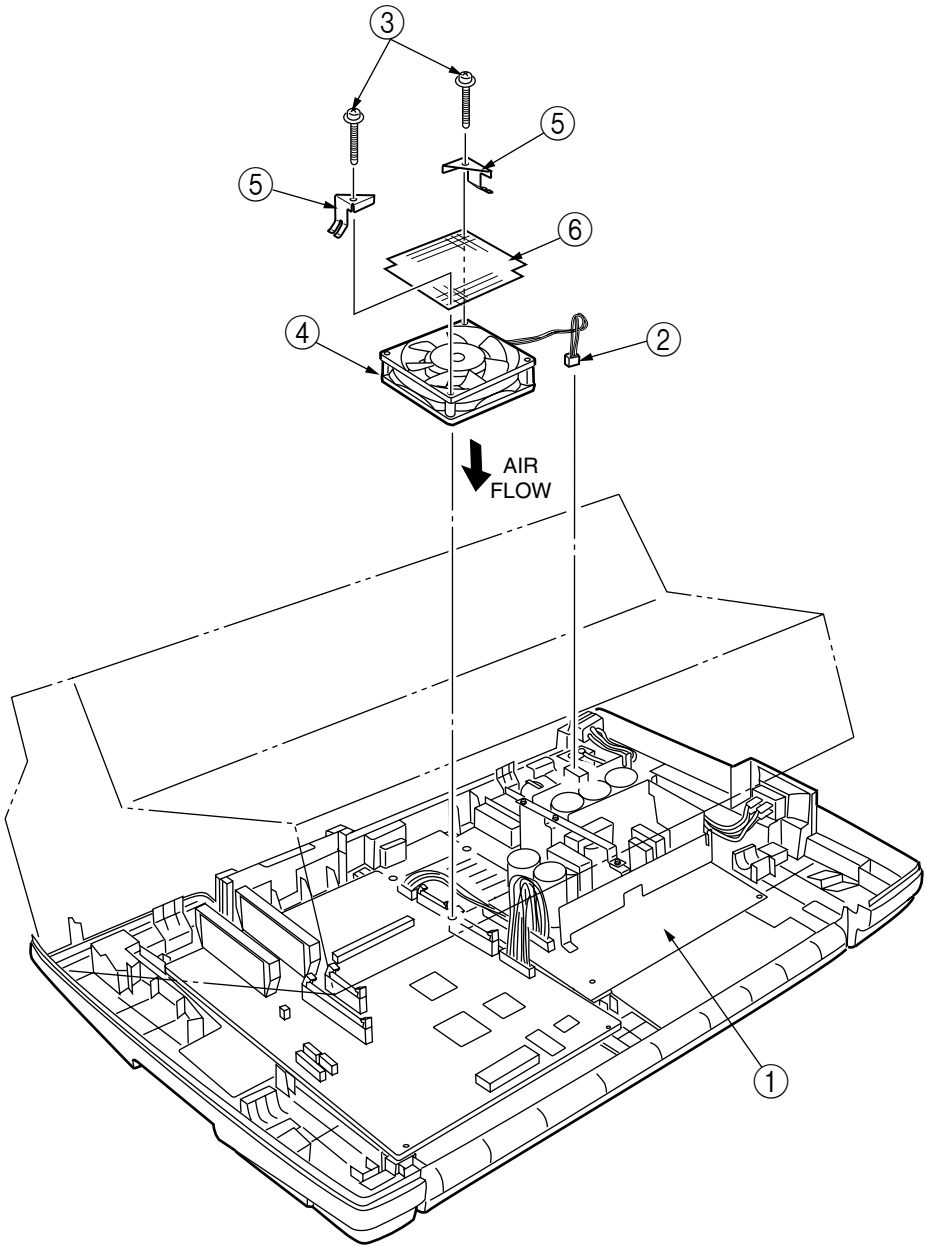

7.2.6 AG sensor board

1) Remove the top cover, side cover (L), side cover (R), and rear cover. (See Section 7.2.1)
2) Disconnect the connector ①, remove the screw ②, then remove the AG sensor board ③.
3) Reinstall the AG sensor board in the opposite sequence to removal.

(Precautions upon installing)

1. The space between the AG sensor board and slit disk should be 0.5mm or less.
2. In a condition in which the main shaft)4) is set to the left worth the amount of play, loosen the screw ⑥ so that the slit disk ⑤ does not make contact with the sensor, and is set to the right worth the amount of play in which the gap is 0.5mm or less, then make adjustments by moving the sensor bracket ⑦ in the direction of the arrow. (Confirm in all areas of the slit disk ⑤.)

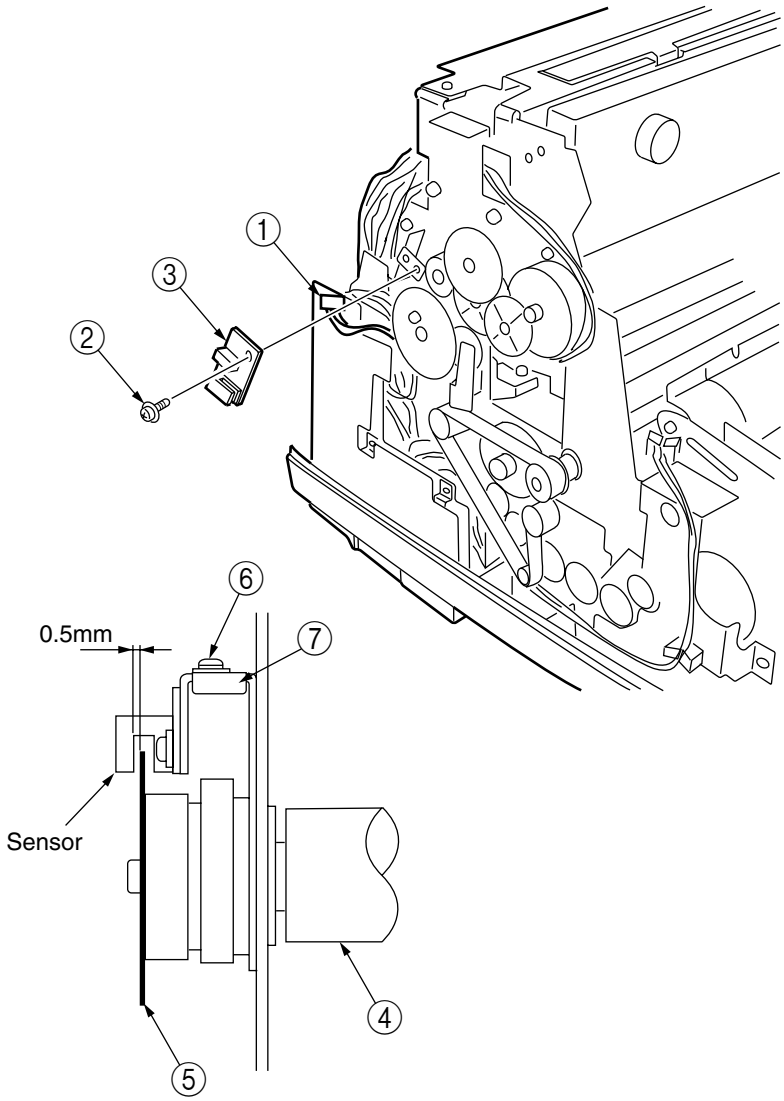

7.2.7 AG motor assembly

1) Remove the top cover, side cover (L), side cover (R), and rear cover. (See Section 7.2.1)
2) Remove the screw ①, then remove the cable guide ②.
3) Disconnect the connector ④ of the AG motor ③.
4) Remove the two screws ⑤, then remove the AG motor ③.
5) Reinstall the AG motor assembly in the opposite sequence to removal.

(Precautions upon installing)

1. Reinstall the AG motor assembly by confirming that the gear⑦ of the AG motor ③ rotates smoothly with no backlash.

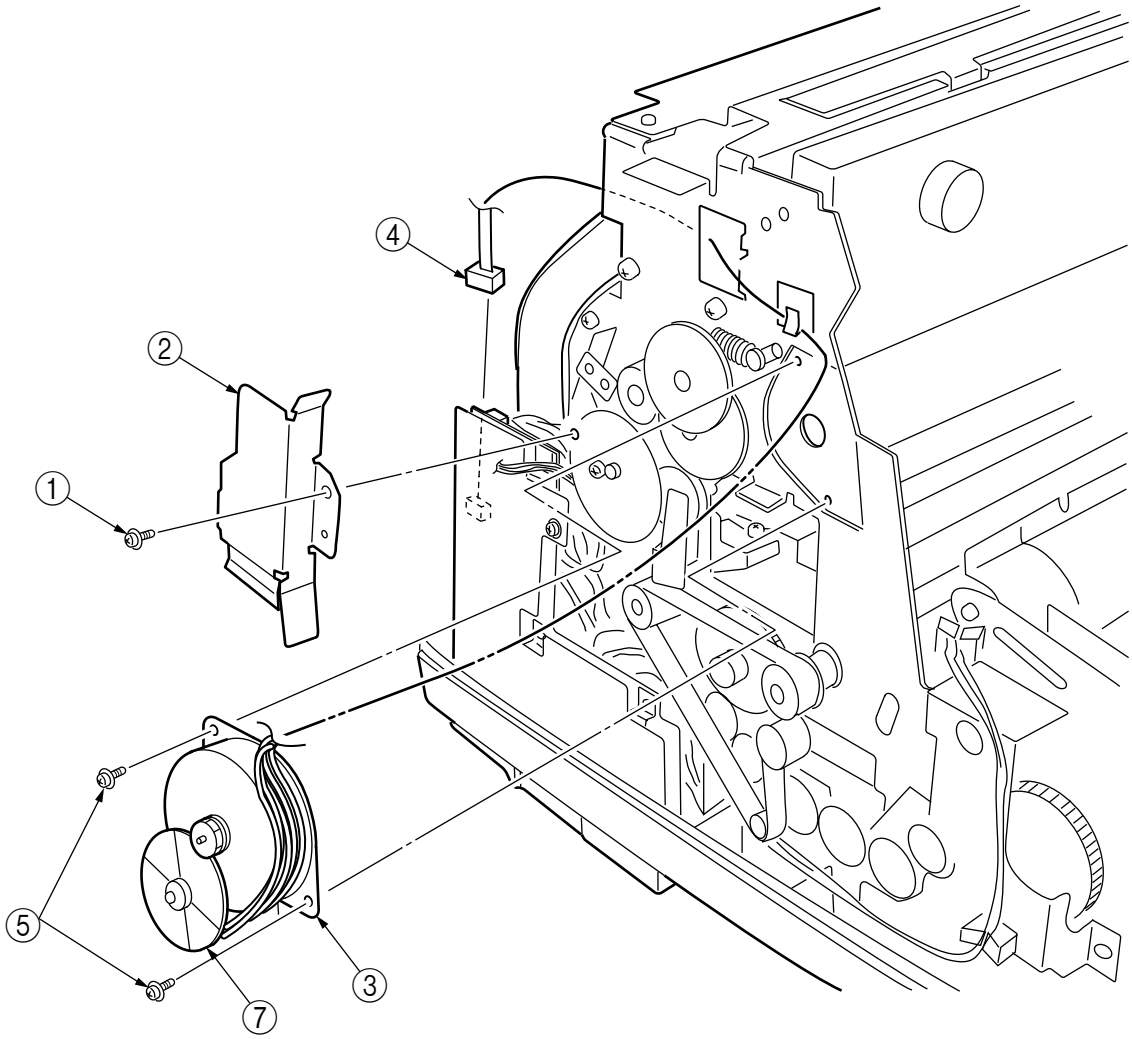

7.2.8 LF motor assembly

1) Remove the top cover, side cover (L), side cover (R), and rear cover. (See Section 7.2.1)
2) Lift the printer unit. (See Section 7.2.2)
3) Open the stage ①. The task can be conducted smoothly in the front tractor mode. If the LF motor gear is not fit in the mode rack groove, rotate the continuous/cut-sheet motor gear under the operator panel and move the rack.
4) Remove the screw ②, remove the idle pulley assembly ③, then remove the mini pitch belt ④.
5) Disconnect the connector ⑥ from CN12 on the control board ⑤.
6) Remove the three screws ⑦, then remove the LF motor assembly ⑧.
7) Reinstall the LF motor assembly in the opposite sequence to removal.

(Precautions upon installing)

1. Reinstall the LF motor assembly by adjusting the backlash of the LF motor assembly ⑧ gear and tractor idle gear.
2. After installing the mini pitch belt ④, adjust the amount of warp in the belt (see Section 8.1).

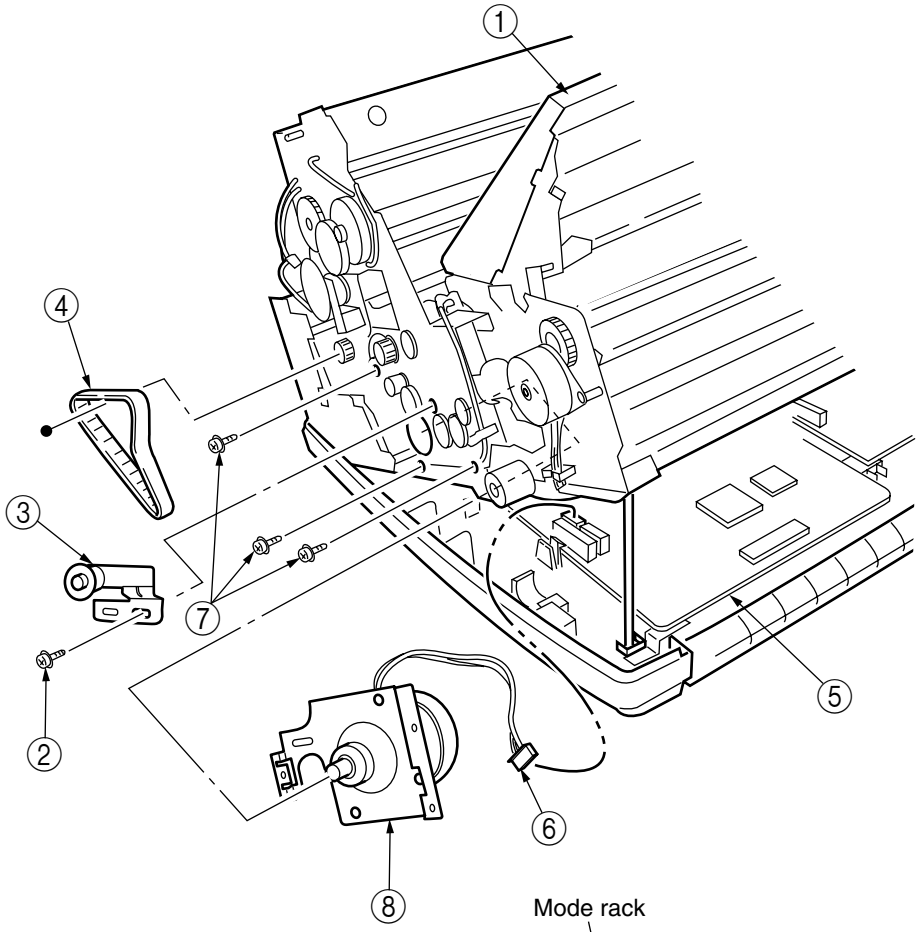

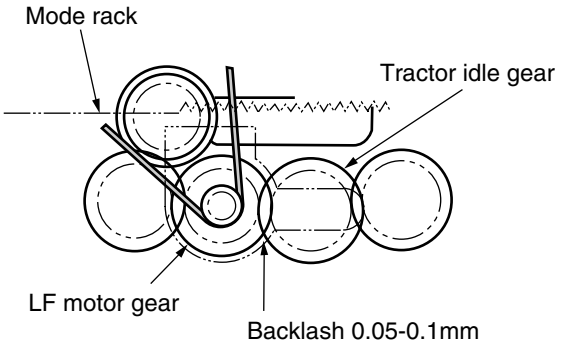

7.2.9 Mini pitch belt (LF)

1) Remove the top cover, side cover (L), side cover (R), and rear cover. (See Section 7.2.1)
2) Loosen the screw ① and move the idle pulley assembly toward the front.
3) Remove the mini pitch belt ③.
4) Reinstall the mini pitch belt (LF) in the opposite sequence to removal.

(Precautions upon installing)

1. After installing the mini pitch belt ③, adjust the amount of warp in the belt (see Section 8.1).

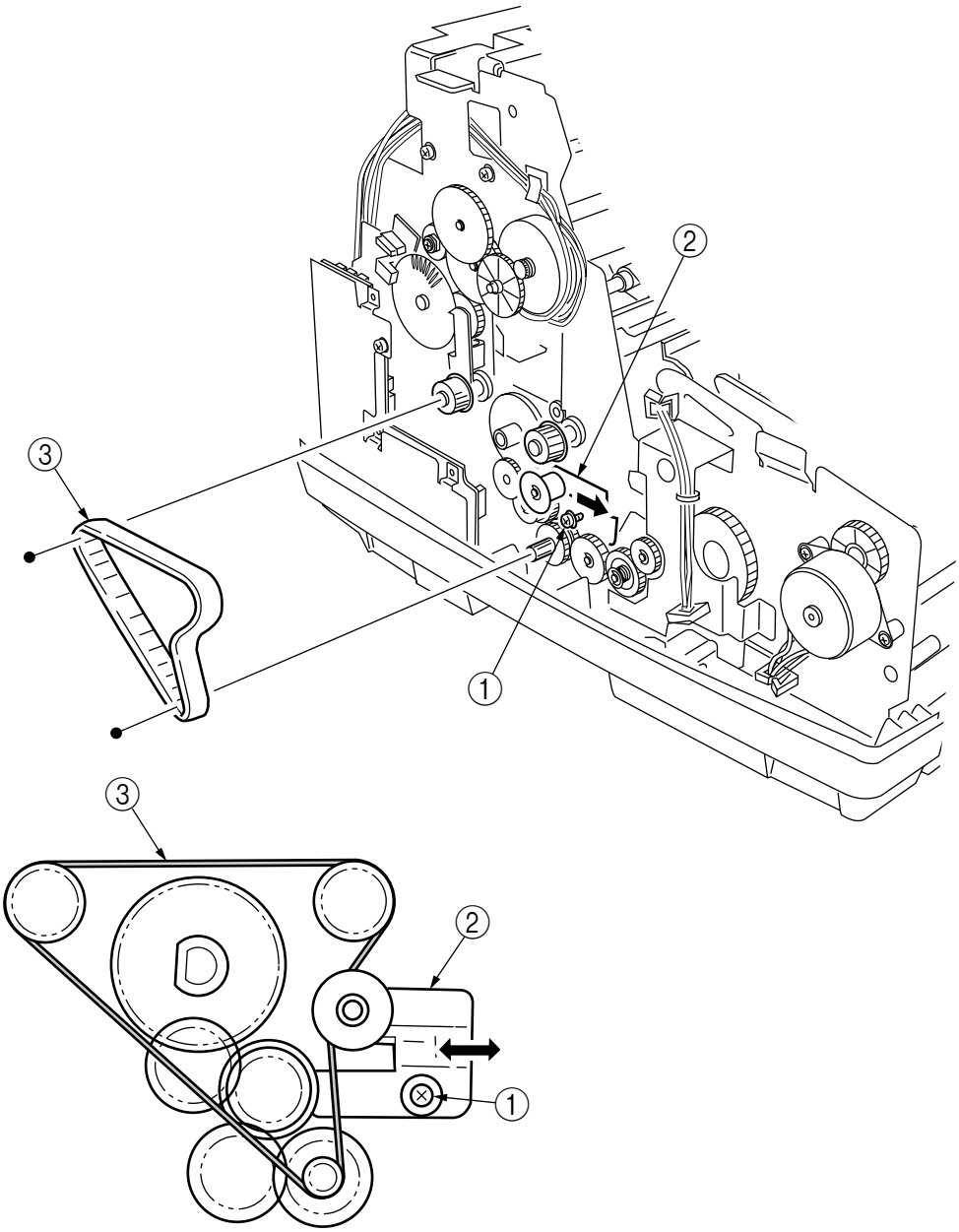

7.2.10 Hopper pulse motor

1) Remove the top cover, side cover (L), side cover (R), and rear cover. (See Section 7.2.1)
2) Lift the printer unit. (See Section 7.2.2)
3) Disconnect the connector ② from CN10 of the control board ①.
4) Disconnect the cord from the cord clamp on the cord route.
5) Remove the two screws ③, then remove the hopper motor ④ and gear ⑤.
6) Reinstall the hopper pulse motor in the opposite sequence to removal.

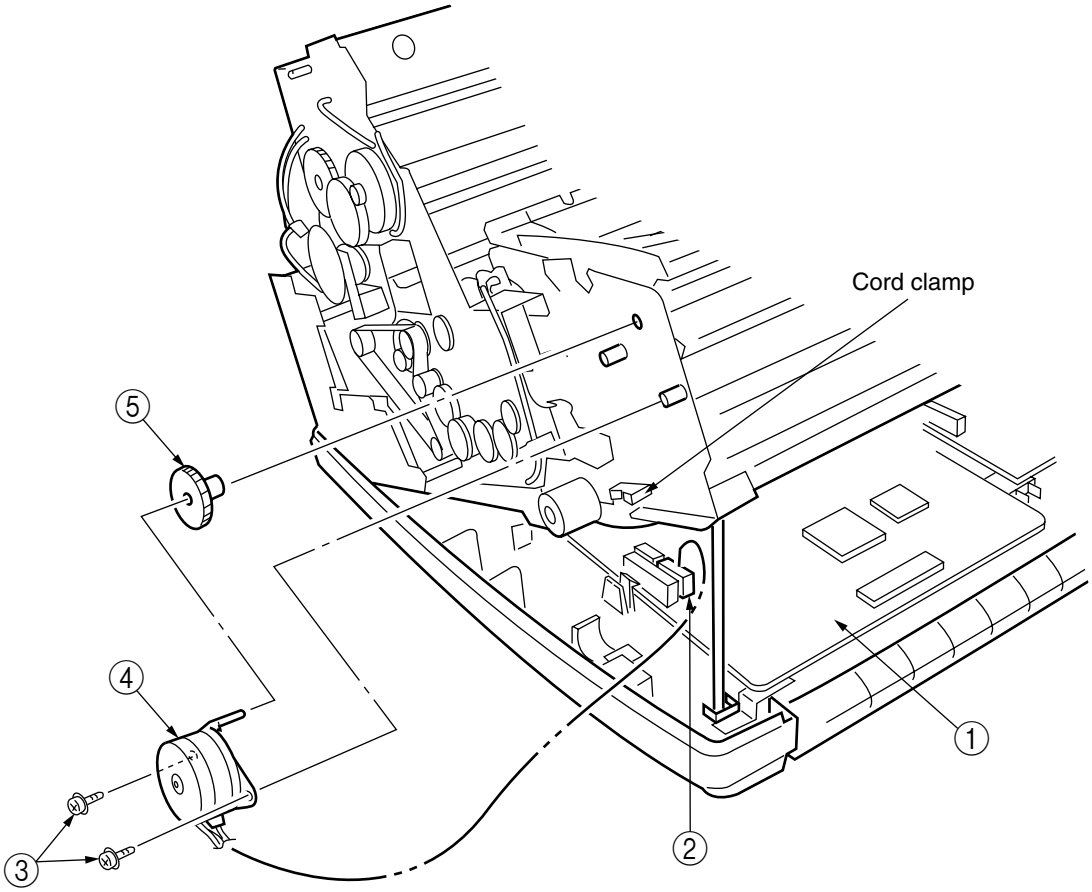

7.2.11 Space motor

1) Remove the top cover, side cover (L), side cover (R), and rear cover. (See Section 7.2.1)
2) Loosen the screws ② securing the idle pulley bracket ①, move it toward the direction of the arrow, then secure the screws.
3) Lift the printer unit. (See Section 7.2.2)
4) Disconnect the connector ④ from CN5 of the relay board ③, then remove the core ⑤.
5) Remove the three screws ⑥, then remove the space motor ⑦.
6) Reinstall the space motor in the opposite sequence to removal.

(Precautions upon installing)

1. Run the cord of the space motor ⑦ through inside the right frame of the printer. Be sure that the cord is attached securely in the cord clamp.
2. When installing, set so that the position of the space belt ⑧ when the head cap is one range becomes 1mm to 5mm from the bottom of the idle pulley ⑨.

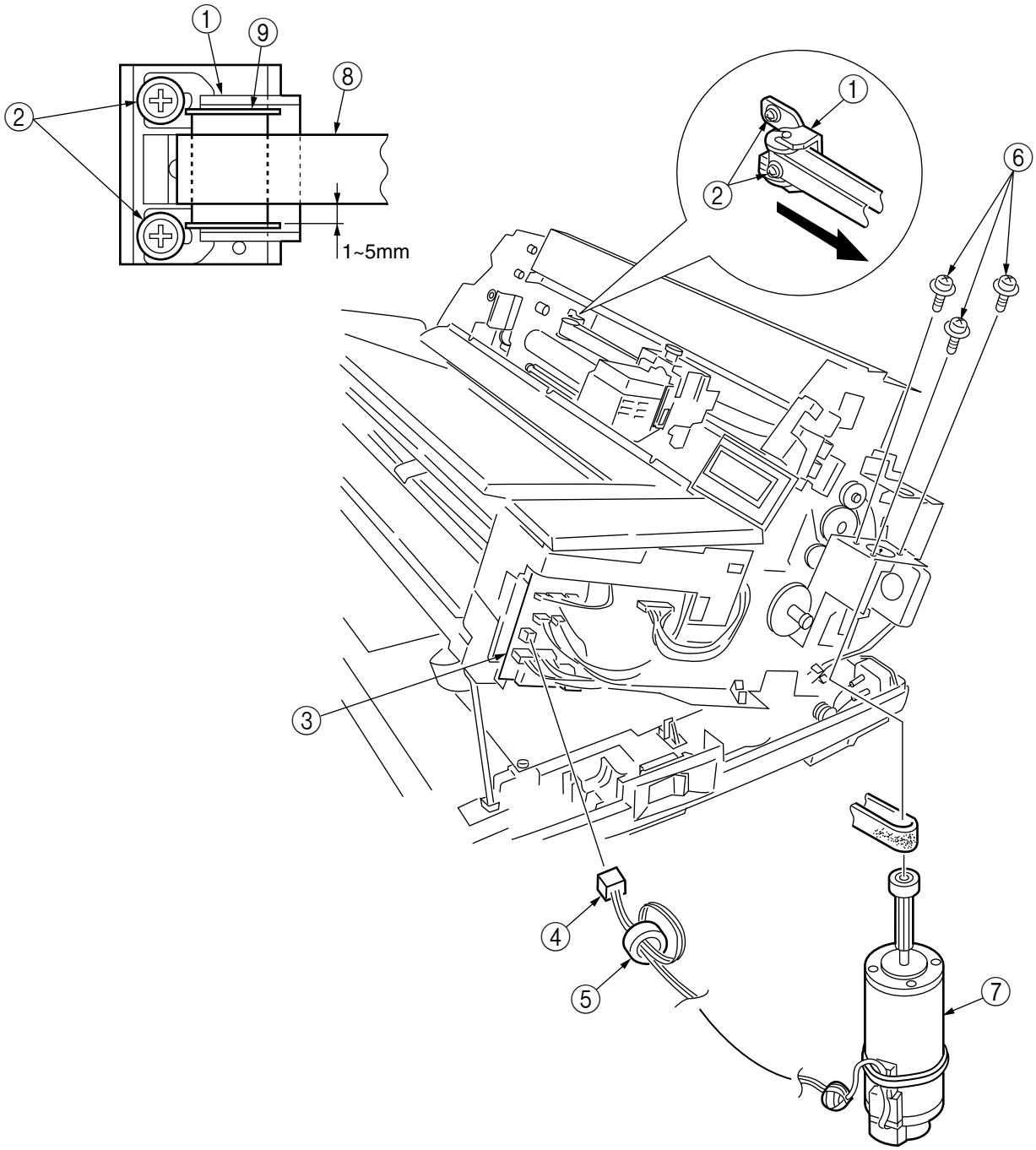

7.2.12 Operation board

1) Remove the top cover, side cover (L), side cover (R), and rear cover. (See Section 7.2.1)
2) Disconnect the connection cord from the operation board ①.
3) Disconnect the operation board assembly ③ from the hook portion.
4) Remove the screw ④ and claws ⑤ (7 locations), then remove the operation board ① from the operation board assembly ③.
5) Reinstall the operation board in the opposite sequence to removal.

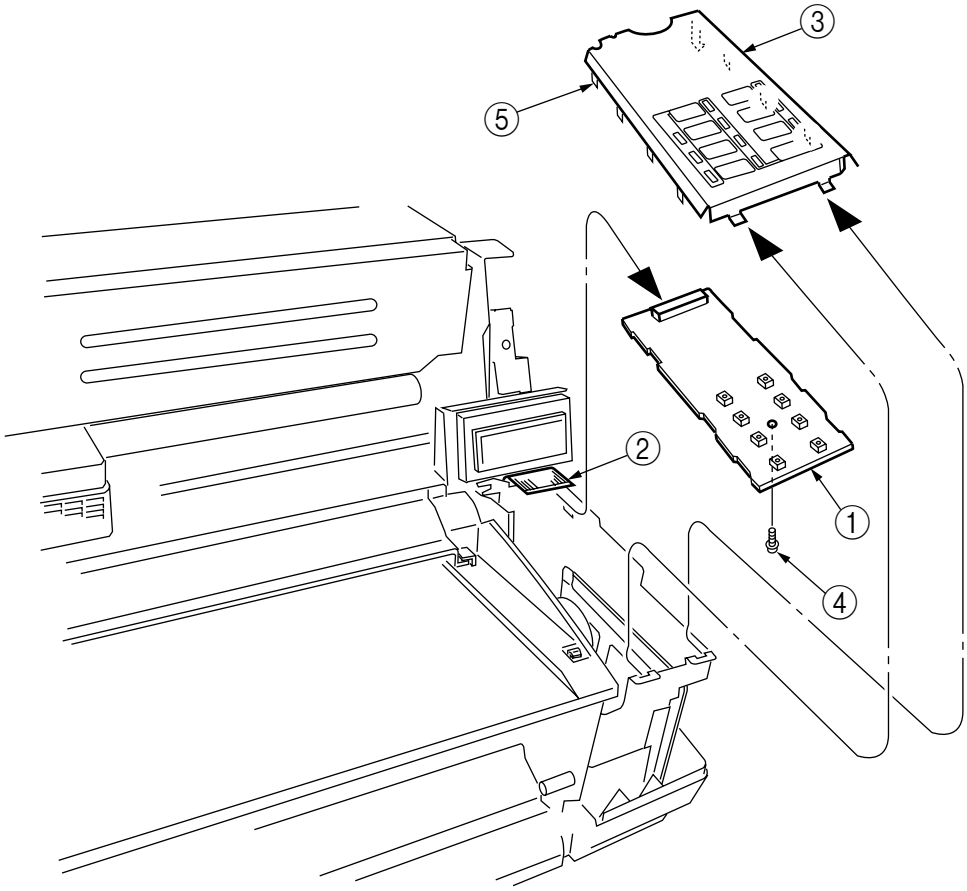

7.2.13 Ribbon guide

1) Turn ON the power switch and perform initialization. Then, turn the power OFF.
2) Remove the center guide ① by pulling it toward the front.
3) Remove the ribbon guide ② by pulling both ends toward the front.
4) Reinstall the ribbon guide in the opposite sequence to removal.

✻ The print head will rise when the power is turned ON. Disassembling is enabled in this condition.

CAUTION!

Be sure to turn OFF the power before disassembling.

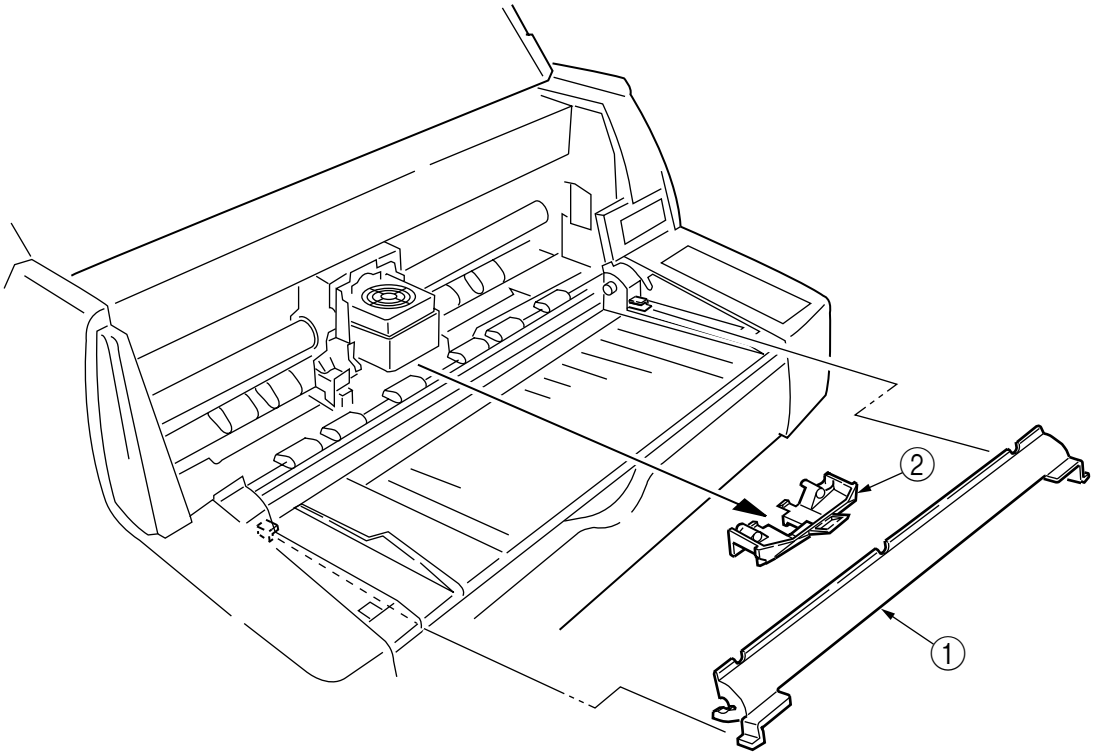

7.2.14 Print head

CAUTION!

Do not touch the print head right after a print job as it can be extremely hot and lead to burns.

1) Turn ON the power switch and perform initialization. Then, turn the power OFF.
2) Remove the center guide and ribbon guide.
3) Remove the screw ①, remove the connector ②, then remove the head fan assembly ③.

✻ The print head will rise when the power is turned ON. Disassembling is enabled in this condition.

CAUTION!

Be sure to turn OFF the power before disassembling.

4) Remove the two screws ④, then pull out the print head ⑤ toward the front and disconnect it from the connector ⑥.
5) Reinstall the print head in the opposite sequence to removal.

(Precautions upon installing)

1. Install the print head ⑤ by pushing it in the direction of the arrow so that it comes in close contact with portion [A] of the carriage frame. When securing the screws ④, be sure to secure from the left screws. (To prevent rising caused by rotation.)
2. Be careful not to drop the print head ⑤ in the platen side. (To prevent the ribbon protector from deforming.)

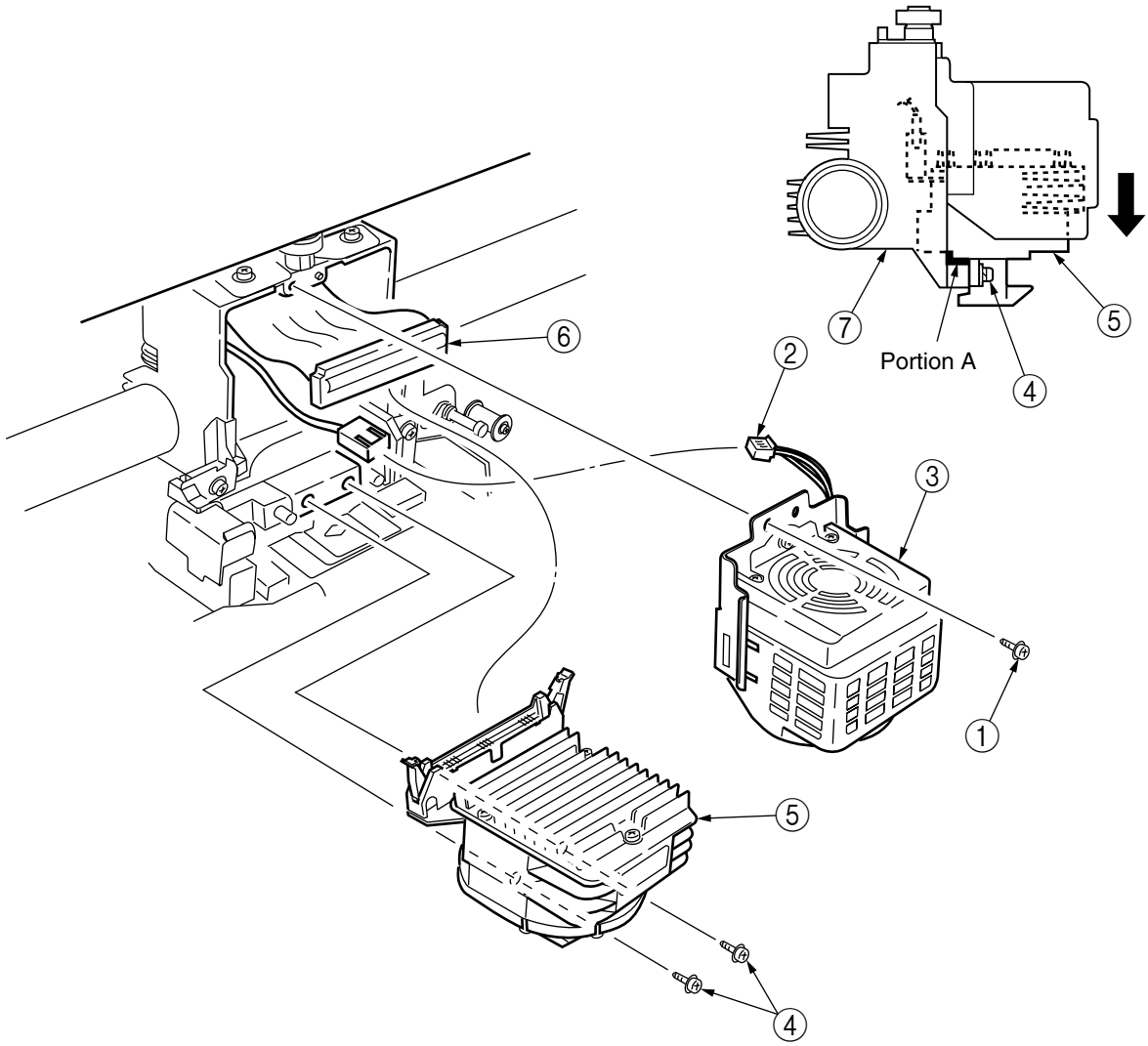

7.2.15 Ribbon protector assembly, paper width sensor (L), (R)

1) Remove the print head. (See Section 7.2.14)
2) Remove the screw ①, then remove the sensor bracket ②.
3) Remove the two screws ③, then remove the ribbon protector ④ and the two collars ⑤. (Be sure not to lose the collars ⑤.)
4) Remove the screw ⑥, then remove the paper width sensors ⑦, ⑧.
5) Reinstall the ribbon protector assembly and paper width sensors (L), (R) in the opposite sequence to removal.

(Precautions upon installing)

1. After installing the ribbon protector ④ assembly and paper width sensors ⑦, ⑧, perform the sensor slice level learning function and adjust the skew. (See Section 8.11.2)

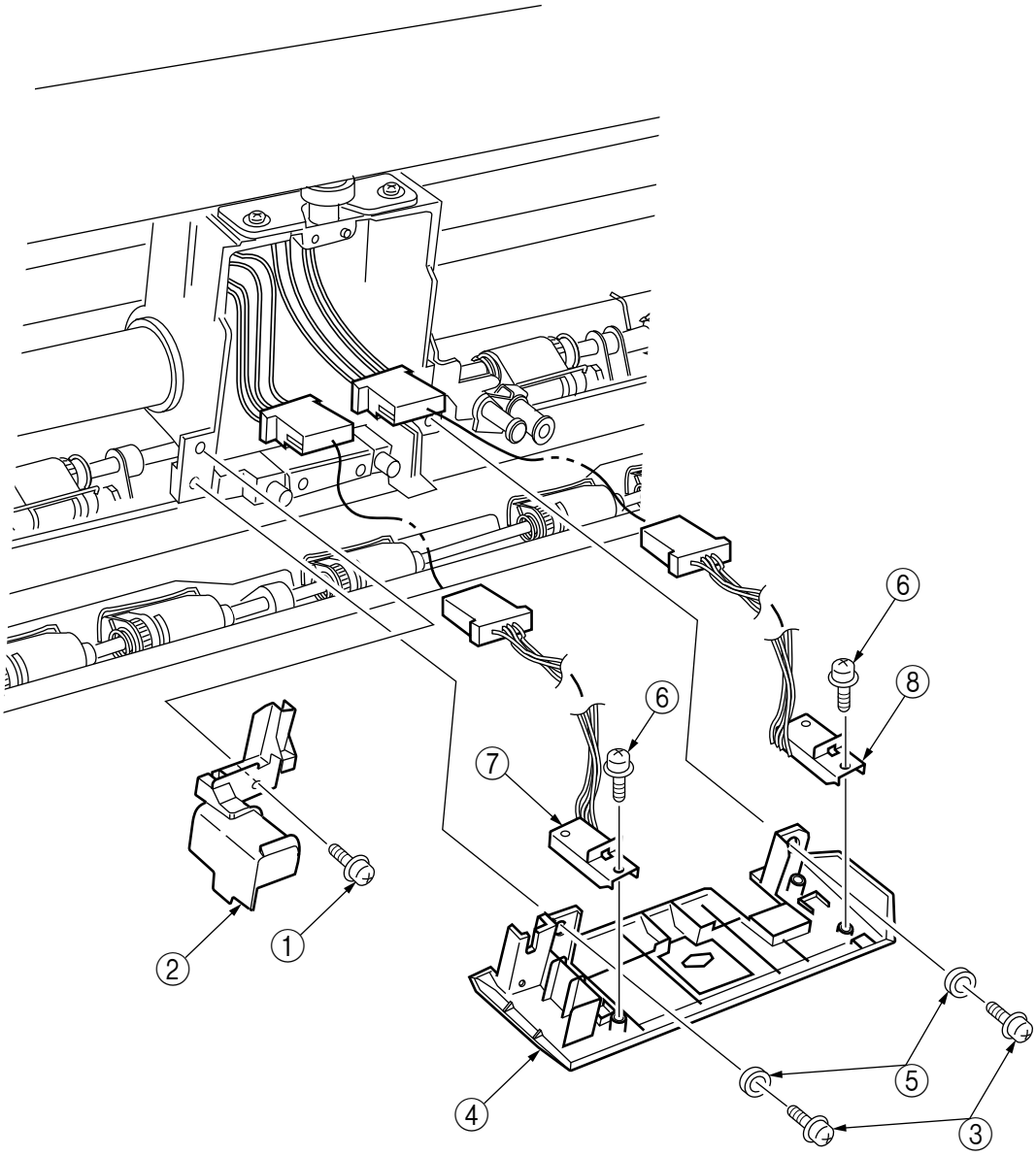

7.2.16 Ribbon feed assembly

1) Remove the top cover, side cover (L), side cover (R), and rear cover. (See Section 7.2.1)
2) Remove the screw ①, then remove the cable guide ②.
3) Disconnect the connector ③ from the ribbon feed motor.
4) Remove the four screws ④, then remove the ribbon bracket ⑤.
5) Remove the two screws ⑥, then remove the ribbon feed assembly ⑦.
6) Reinstall the ribbon feed assembly in the opposite sequence to removal.

(Precautions upon installing)

1. Install the ribbon feed assembly ⑦ by bringing it all the way to the top (arrow direction).

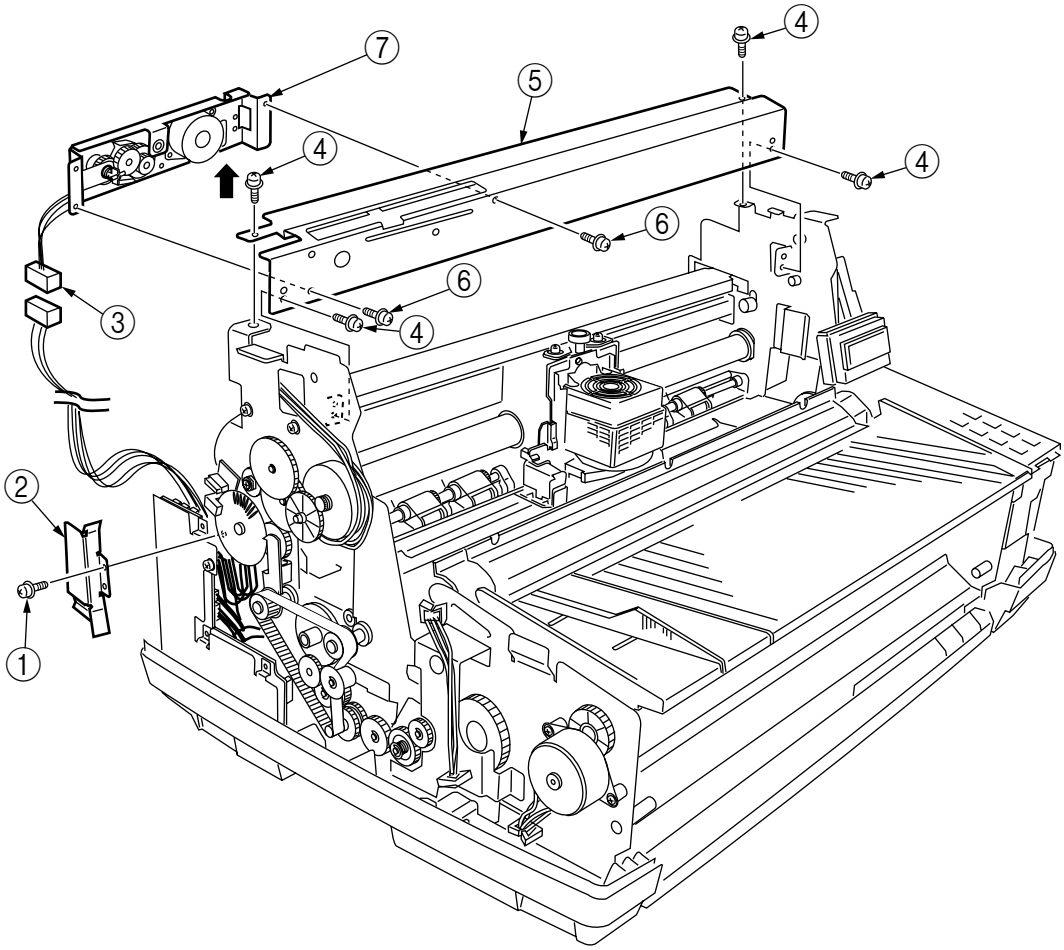

7.2.17 Linear scale

1) Remove the top cover, side cover (L), side cover (R), and rear cover. (See Section 7.2.1)
2) Slide the head cable ① in the direction of the arrow, then remove the screw ② and scale bracket ③.
3) Disconnect the linear scale ⑤ from the hook portion of the scale spring ④.
4) Reinstall the linear scale assembly in the opposite sequence to removal.

(Precautions upon installing)

1. Install the linear scale ⑤ so that the front side is on the left when viewed from the front side of the printer.

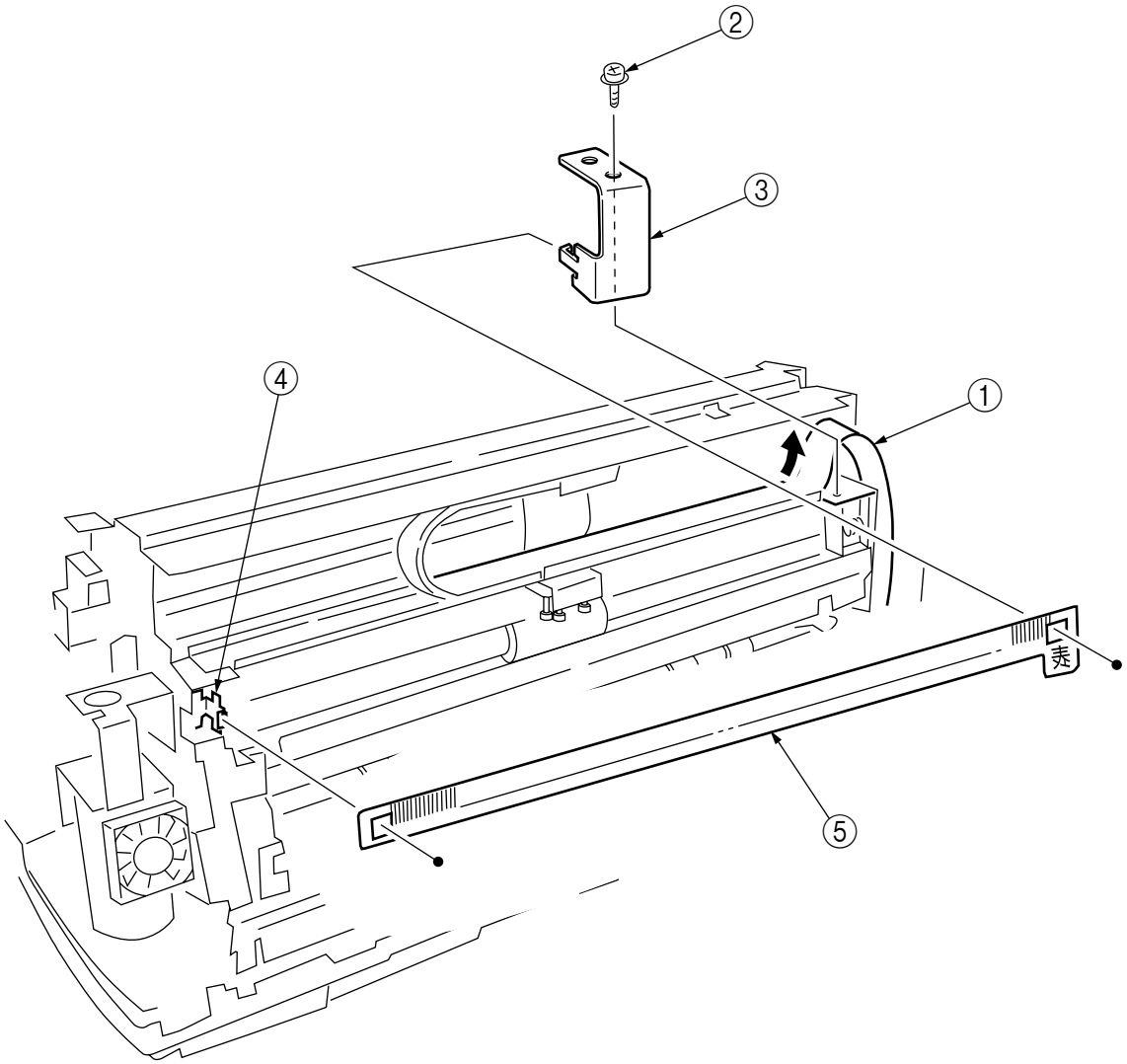

Rear view of the printer

7.2.18 Linear sensor assembly

1) Remove the top cover, side cover (L), side cover (R), and rear cover. (See Section 7.2.1)
2) Remove the print head. (See Section 7.2.14)
3) Remove the linear scale. (See Section 7.2.17)
4) Remove the connector ①.
5) Remove the two screws ②, then remove the linear sensor assembly ③ by sliding it down.
6) Reinstall the linear sensor assembly in the opposite sequence to removal.

(Precautions upon installing)

1. Install the linear sensor assembly ③ on the upper portion.
2. After installing the linear sensor assembly ③, confirm that the linear sensor and linear scale are not interfering when test printing a ream weight of 55kg or in the condition indicated in Section 8.4.

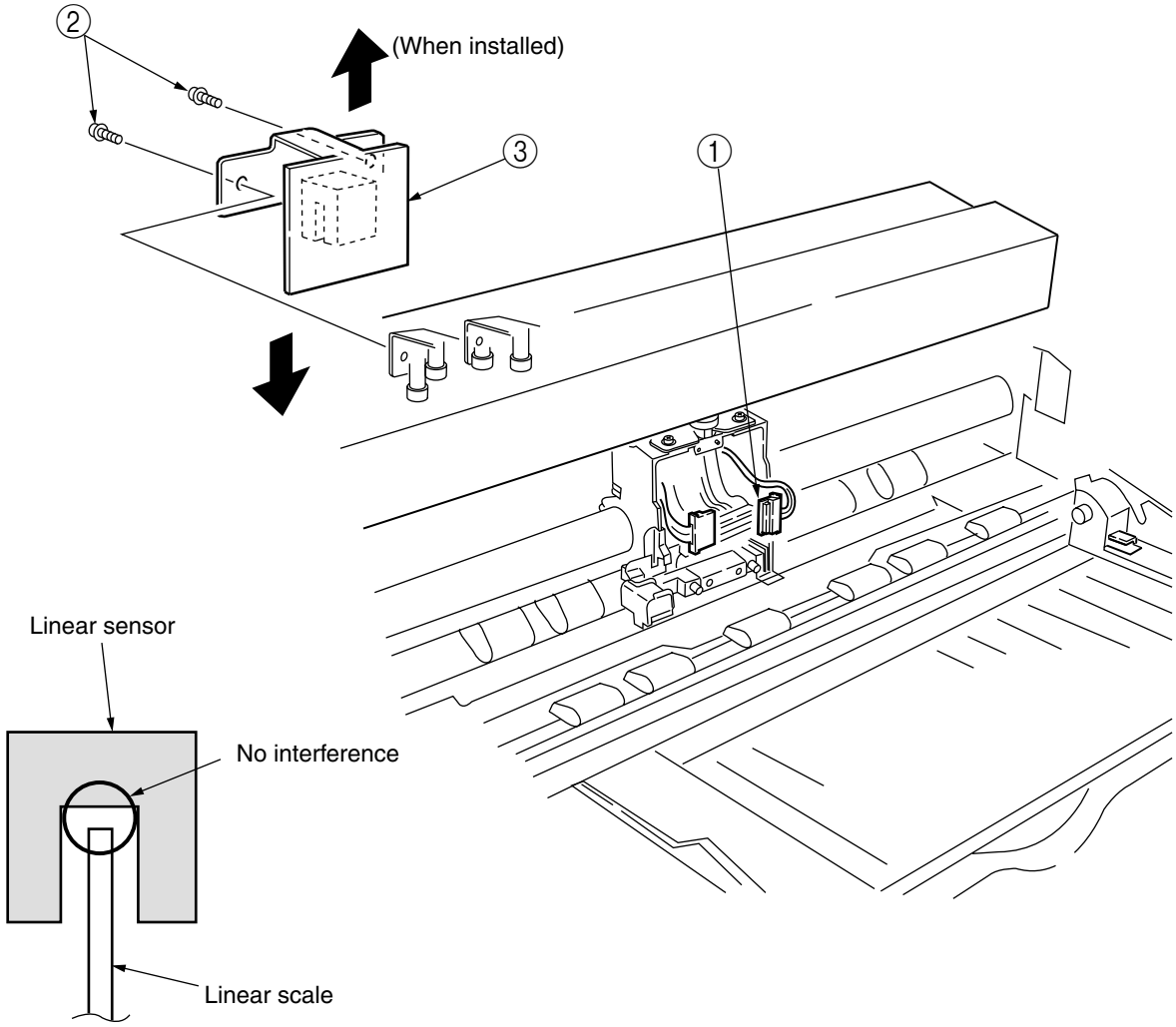

7.2.19 Space belt

1) Remove the top cover, side cover (L), side cover (R), and rear cover. (See Section 7.2.1)
2) Remove the space motor. (See Section 7.2.11)
3) Remove the print head. (See Section 7.2.14)
4) Remove the idle pulley ① from the idle pulley bracket ②, then remove the space belt ③.
5) Remove the screw ④, then remove the space belt ③.
6) Reinstall the space belt in the opposite sequence to removal.

(Precautions upon installing)

1. Set the claw of the space belt ③ in the hole of the carriage frame.

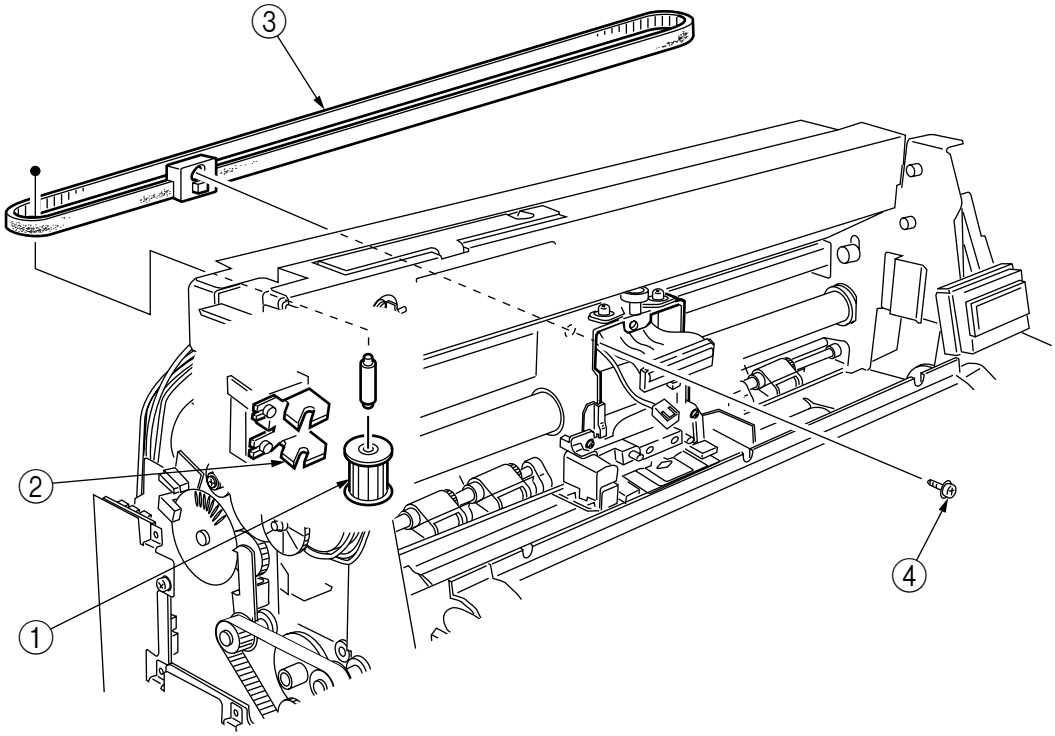

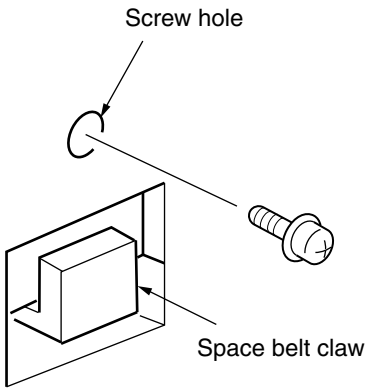

7.2.20 I/F circuit board (MIF board)

1) Remove the top cover, side cover (L), side cover (R), and rear cover. (See Section 7.2.1)
2) Lift the printer unit. (See Section 7.2.2)
3) Remove the three screws ①, then set down the printer unit temporarily and remove the I/F board assembly ②.
4) Disconnect the five connection cords ③ connected to the I/F board assembly ②.
5) Remove the five screws ④, then remove the sheet ⑤ and I/F board.
6) Reinstall the I/F board in the opposite sequence to removal.

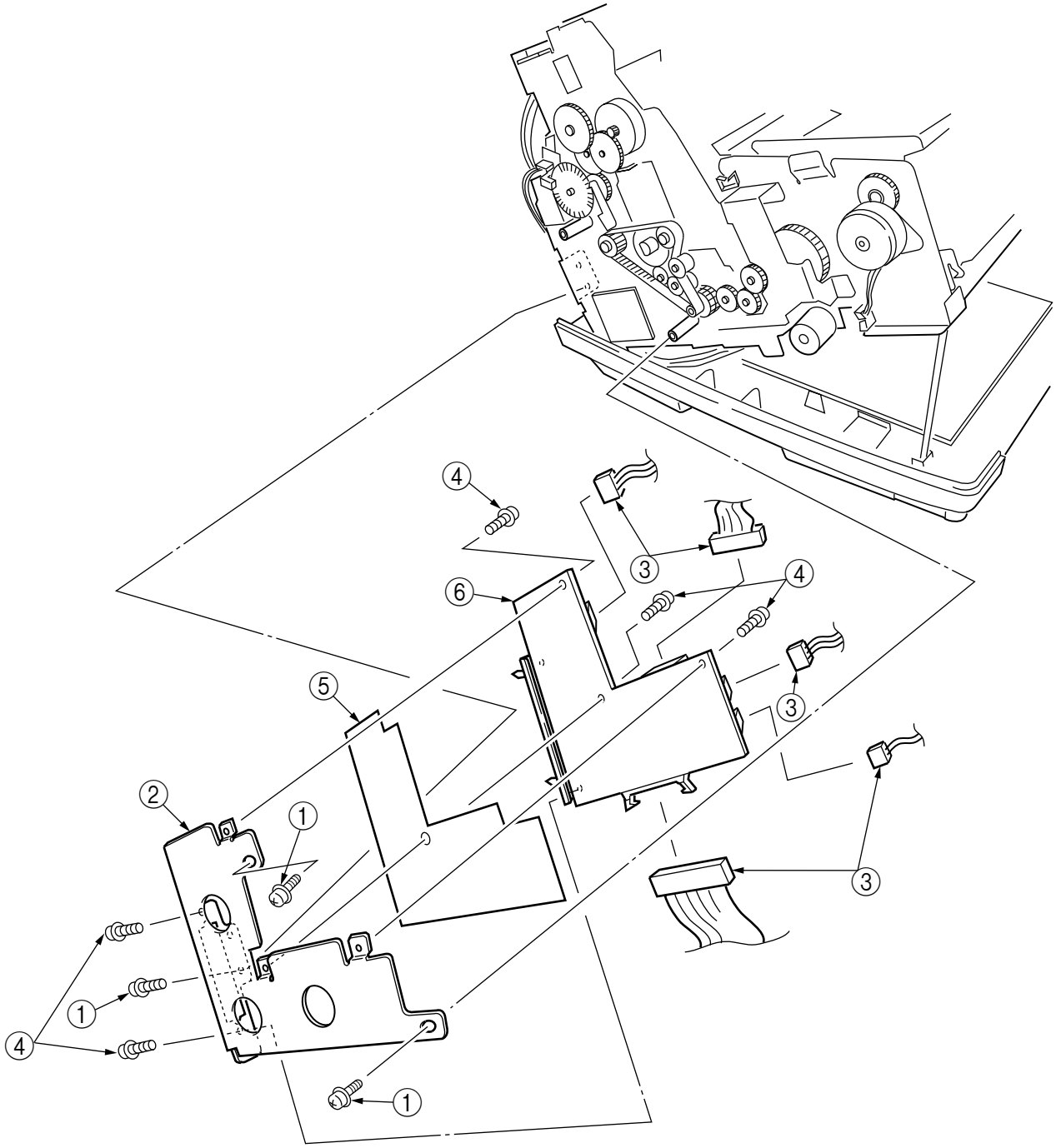

7.2.21 Continuous/Cut-sheet sensor board

1) Remove the top cover, side cover (L), side cover (R), and rear cover. (See Section 7.2.1)
2) Lift the printer unit. (See Section 7.2.2)
3) Remove the three screws ①, then set down the printer unit temporarily and remove the I/F board assembly ②.
4) Disconnect the five connection cords ③ connected to the I/F board assembly ②.
5) Remove the two screws ④, then remove the RET board ⑤ and film_ interface ⑥.
6) Reinstall the continuous/cut-sheet board in the opposite sequence to removal.

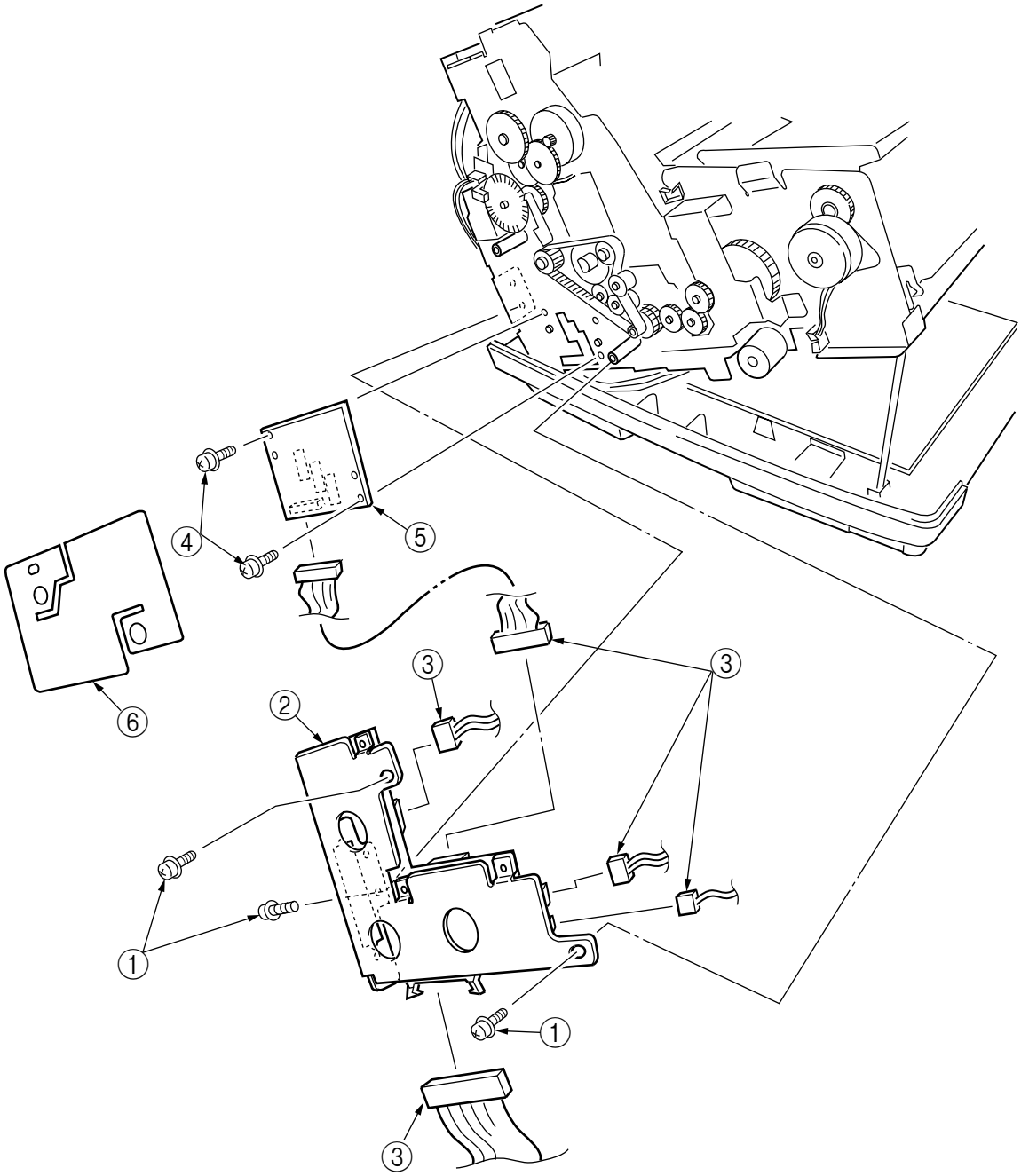

7.2.22 Platen

1) Remove the top cover, side cover (L), side cover (R), and rear cover. (See Section 7.2.1)
2) Lift the printer unit. (See Section 7.2.2)
3) Remove the LF motor assembly. (See Section 7.2.8)
4) Disconnect all the connectors from the control board ①.

CAUTION!

Be sure that no cords in the printer are caught.

5) Remove the screw ②, then remove the platen gear [B] ③.
6) Remove the E-shape washer ④, then remove the wave washer ⑤.
7) Remove the E-shape washer ⑥, then remove the gear ⑦.
8) Remove the screw ⑧, then remove the platen gear ⑨ and two bearings ⑩.
9) Ⓐ:Slide the platen ⑪ to the right and remove the left side of the platen ⑪.
   Ⓑ:Slide the platen ⑪ to the lower left side of the printer and remove the right side of the platen ⑪.
   Ⓒ:Slide the platen ⑪ further down and remove it from the printer.
   (If the platen does not slide easily, slide by lifting the front portion of the printer unit.)
10) Reinstall the platen in the opposite sequence to removal.

(Precautions upon installing)

1. Be sure that no cords are caught inside the printer when reinstalling the platen ⑪.

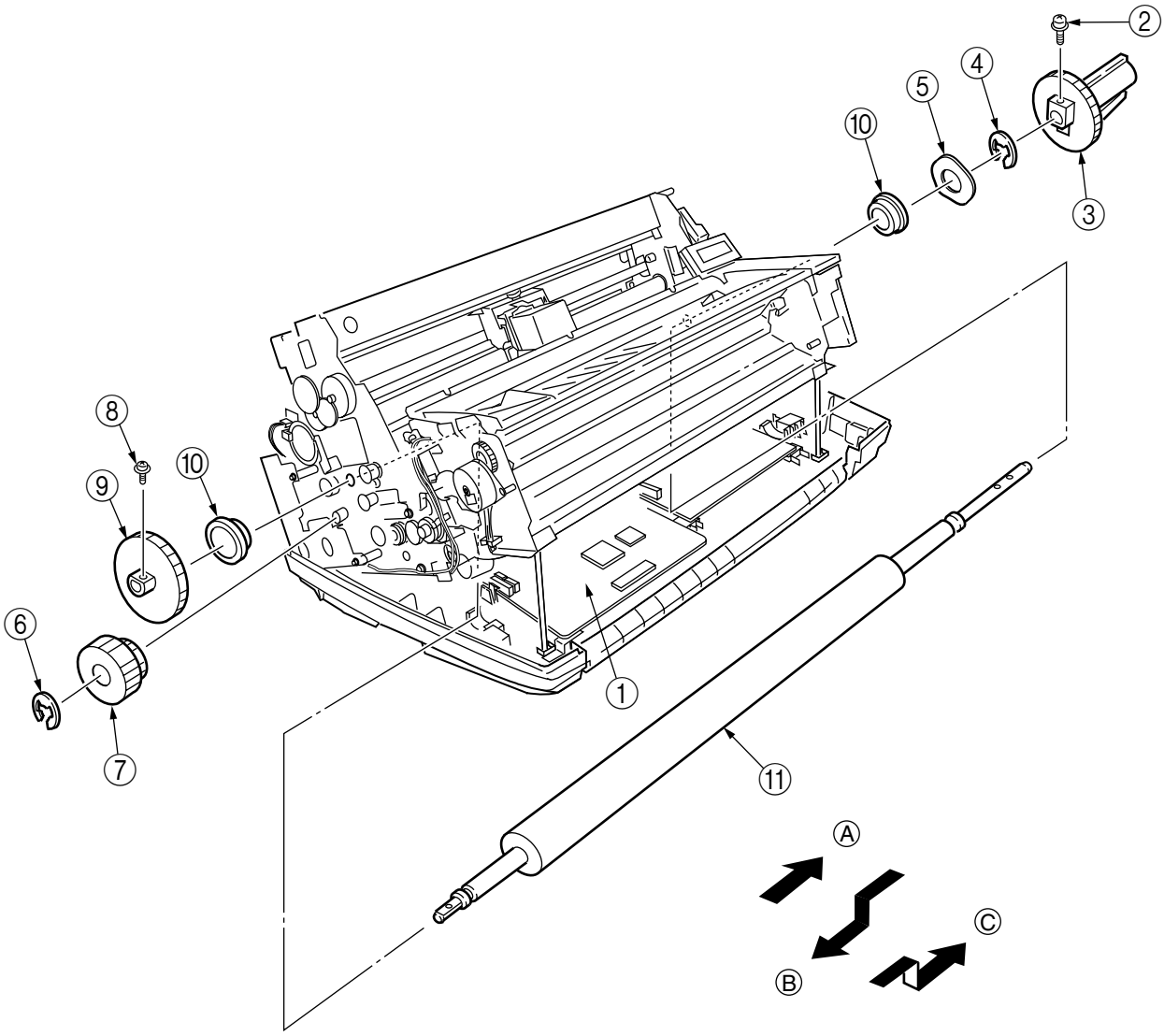

7.2.23 Sprocket assembly (L), (R) (front tractor)

1) Remove the top cover, side cover (L), side cover (R), and rear cover. (See Section 7.2.1)
2) Lift the printer unit. (See Section 7.2.2)
3) Open the table ①.
4) Remove the sheet guide ②.
5) Remove the two screws ③, then remove the front sheet guide ④.
6) Disconnect the cord on the cord clamp of the cable guide ⑤.
7) Remove the three screws ⑥, then disconnect the three tie wraps ⑦ and remove the cable guide ⑤.
8) Slide the mode rack ⑧ in the direction of the arrow.
9) Remove the five screws ⑨, then remove the shield plate ⑩.
10) Remove the two screws ⑪, then disconnect all connectors and remove the relay board assembly ⑫.
11) Remove the two screws ⑬, then remove the bracket operation spring ⑭.
12) Spread the claw and remove the tractor drive gear ⑮ and bush ⑯.
13) Pull out the front tractor drive shaft ⑰ to the right.

CAUTION!

If the claw of the tractor drive gear ⑮ does not spread easily, remove the E-shape washer and bush on the right side and pull out the front tractor driver shaft ⑰ to the left.

14) Remove the two screws (18), then remove the guide shaft ⑱ and sprocket assembly (L) ⑲ and (R) ⑳.
15) Reinstall the sprocket assembly (L), (R) in the opposite sequence to removal.

(Precautions upon installing)

1. Insert the front tractor drive shaft ⑰ after adjusting the phase of the sprocket pin of the sprocket assembly (L) ⑲ and (R) ⑳.

Adjusting the Phase

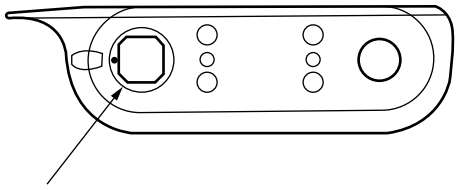

Adjust the convex portion of the wheel of the sprocket assembly (L) and (R) toward the front.

2. Move the mode rack ⑧ as far as it will go in. (Move by rotating the continuous/cut-sheet motor gear by hand in advance.)

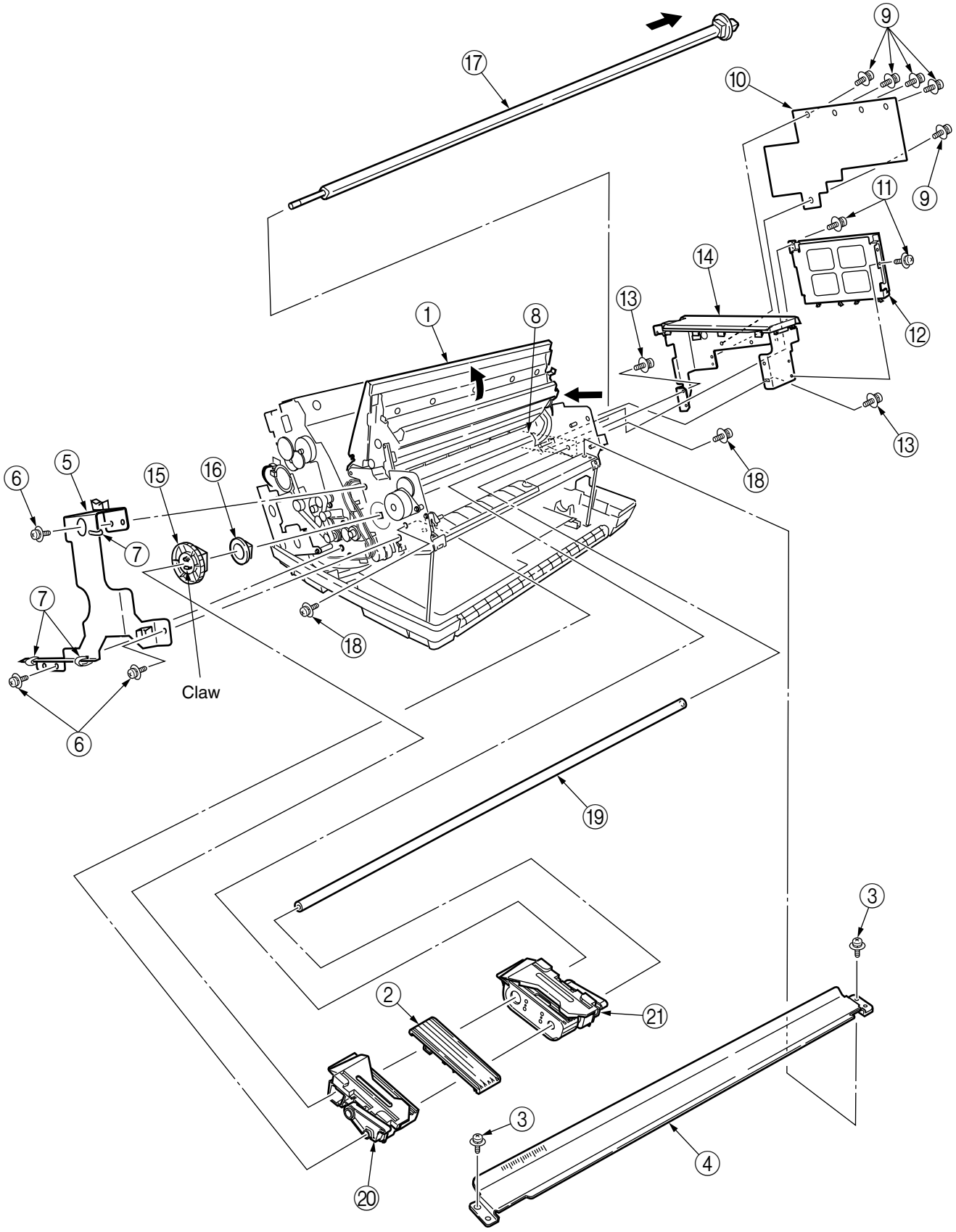
17
9
10
9
11
14
13
1
8
12
13
18
6
5
15
16
7
7
18
Claw
6
19
3
2
21
3
4
20

7.2.24 MTR circuit board (relay board)

1) Remove the top cover, side cover (L), side cover (R), and rear cover. (See Section 7.2.1)
2) Lift the printer unit. (See Section 7.2.2)
3) Remove the five screws ①, then remove the shield plate ②.
4) Disconnect all the connectors from the relay board ③.
5) Remove the two screws ④, then remove the relay board ③.
6) Reinstall the MTR board in the opposite sequence to removal.

(Precautions upon installing)

1. Set the lower portion of the relay board ③ in the hook portion then secure the screws.

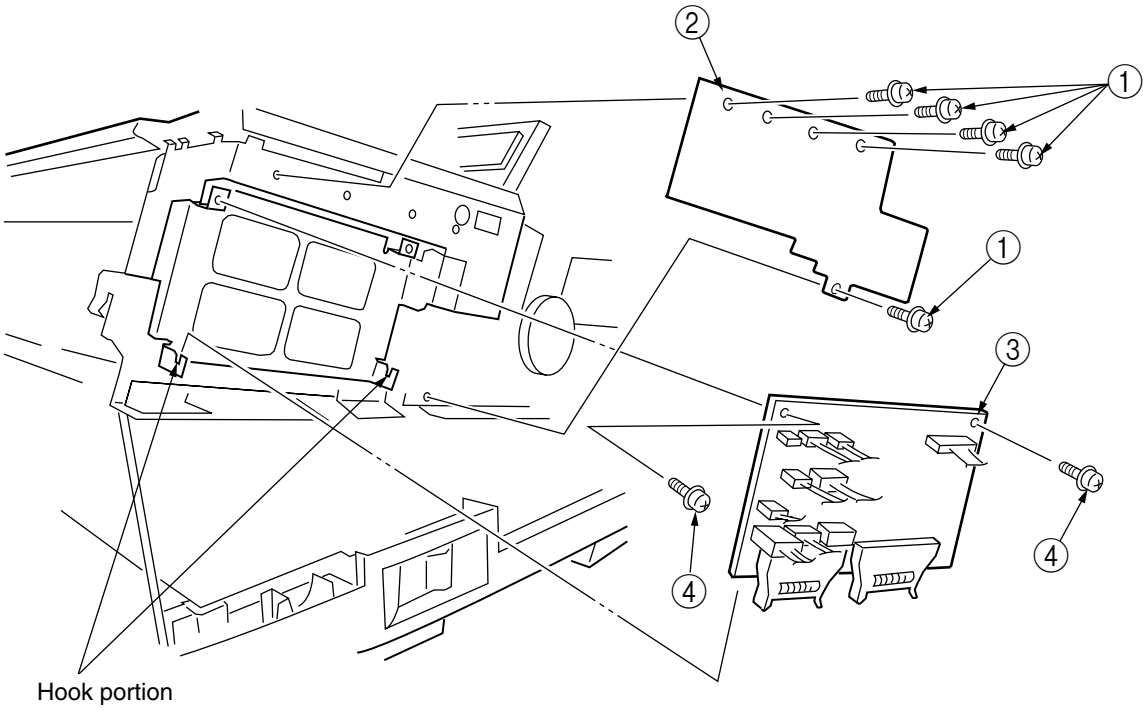

7.2.25 Continuous/Cut-sheet switch motor

1) Remove the top cover, side cover (L), side cover (R), and rear cover. (See Section 7.2.1)
2) Lift the printer unit. (See Section 7.2.2)
3) Remove the five screws ①, then remove the shield plate ②.
4) Disconnect the connector ④ from CN12 of the relay board assembly ③.
5) Remove the two screws ⑤, then remove the relay board assembly ③.
6) Remove the two screws ⑥, then remove the continuous/cut-sheet switch motor ⑦.
7) Reinstall the continuous/cut-sheet switch motor in the opposite sequence to removal.

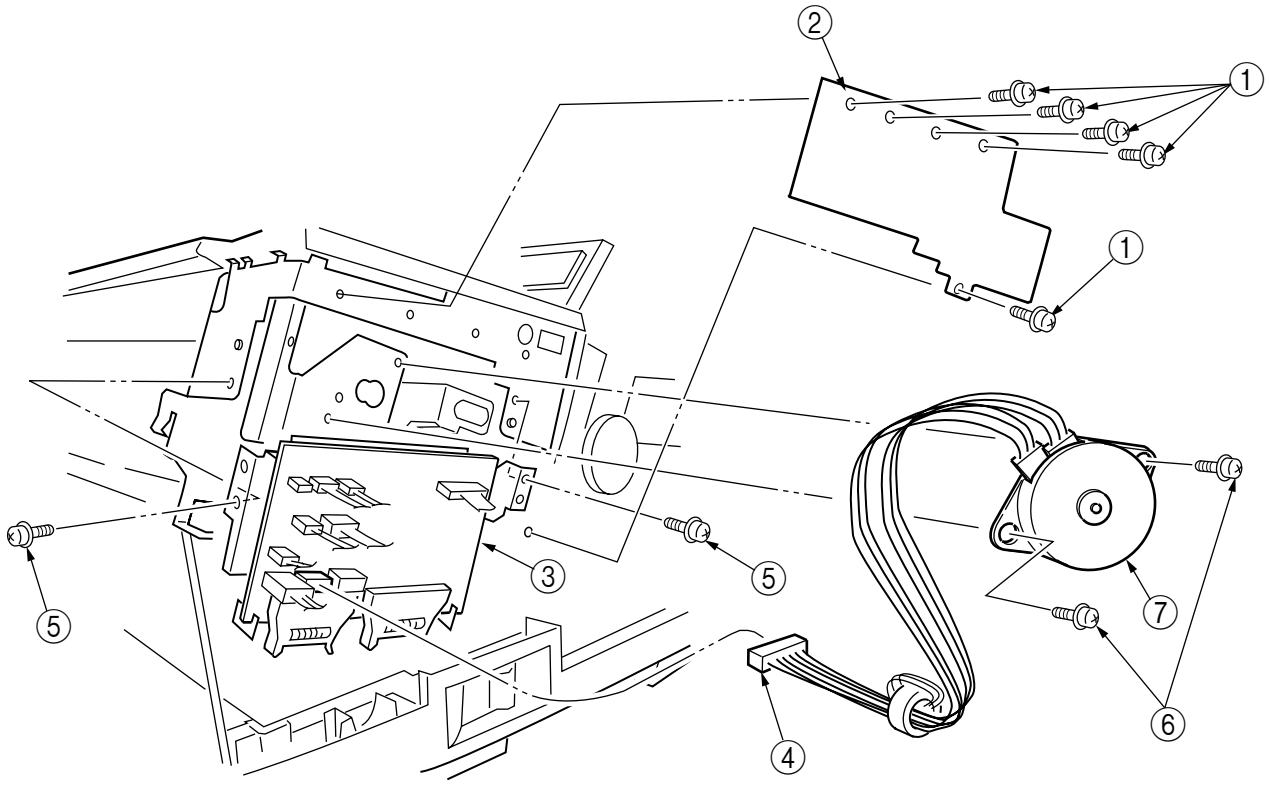

7.2.26 Cover open sensor assembly

1) Remove the top cover, side cover (L), side cover (R), and rear cover. (See Section 7.2.1)
2) Disconnect the connector ①.
3) Remove the two screws ②, then remove the screw ④ from the resistor ③ and remove the cover open sensor assembly ⑤.
4) Reinstall the cover open sensor assembly in the opposite sequence to removal.
   For details, refer to the figure on the following page.

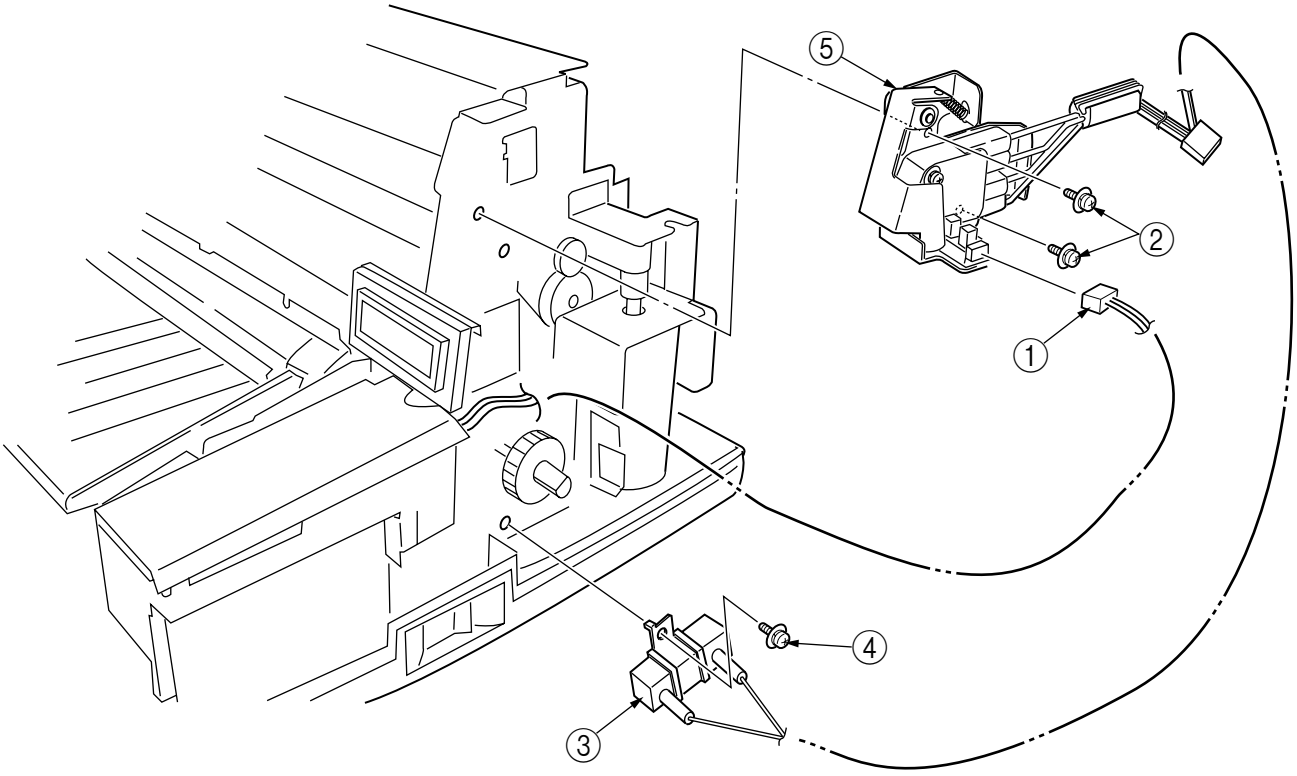

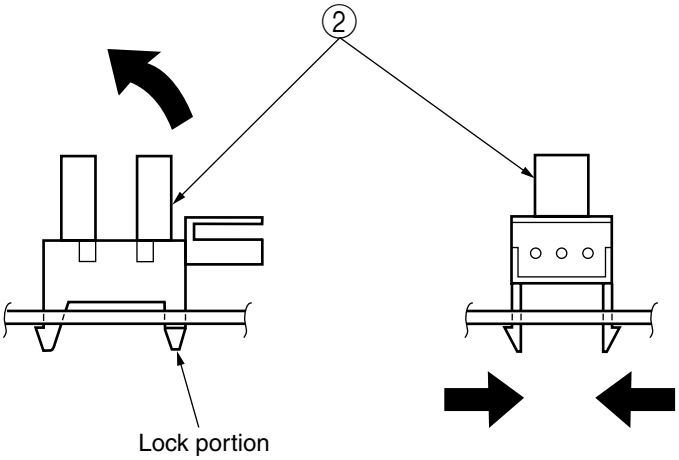

7.2.27 EI sensor assembly

1) Turn ON the power, initialize the device, then turn the power OFF.
2) Remove the center guide and ribbon guide. (See Section 7.2.13)
3) Remove the head fan assembly and print head. (See Section 7.2.14)
4) Remove the connector ① and screw ②, then remove the EI sensor assembly ③. (Remove by rotating in the direction of the arrow.) Be careful as an adjustment seam may be caught at this time.
5) Reinstall the EI sensor assembly in the opposite sequence to removal.

CAUTION!

Be sure to turn OFF the power before disassembling.

(Precautions upon installing)

1. Confirm the gap with the platen after installing the EI sensor assembly ③. Confirm a gap of 0.1 to 0.16mm with a thickness gauge. If an adjustment seam exists when removing the EI sensor assembly ③, it is not required if the gap from the platen is 0.1 to 0.16mm when reinstalling. (See Section 8.4)

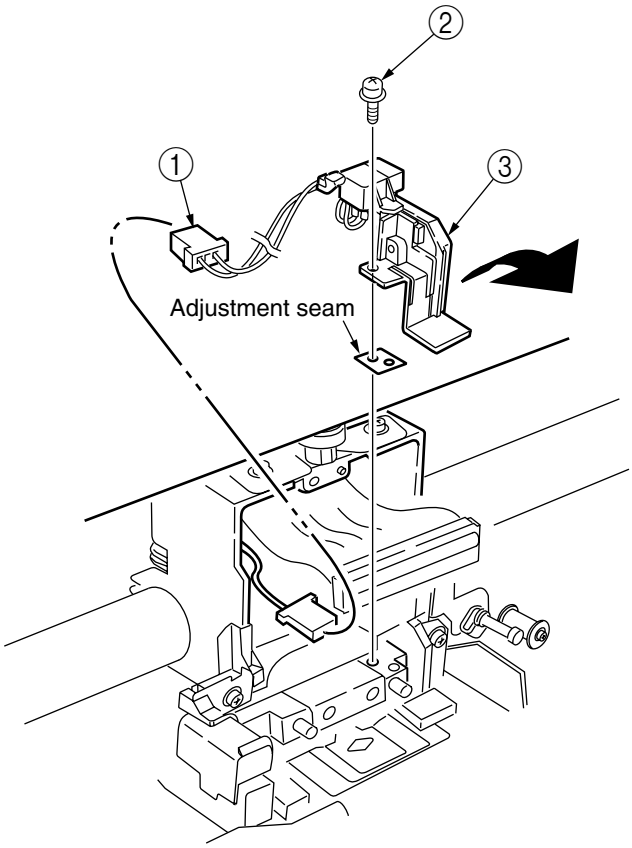

7.2.28 Head fan assembly

1) Remove the center guide. (See Section 7.2.13②)
2) Remove the screw ①, then remove the connector ② and head fan assembly ③.
3) Reinstall the head fan assembly in the opposite sequence to removal.

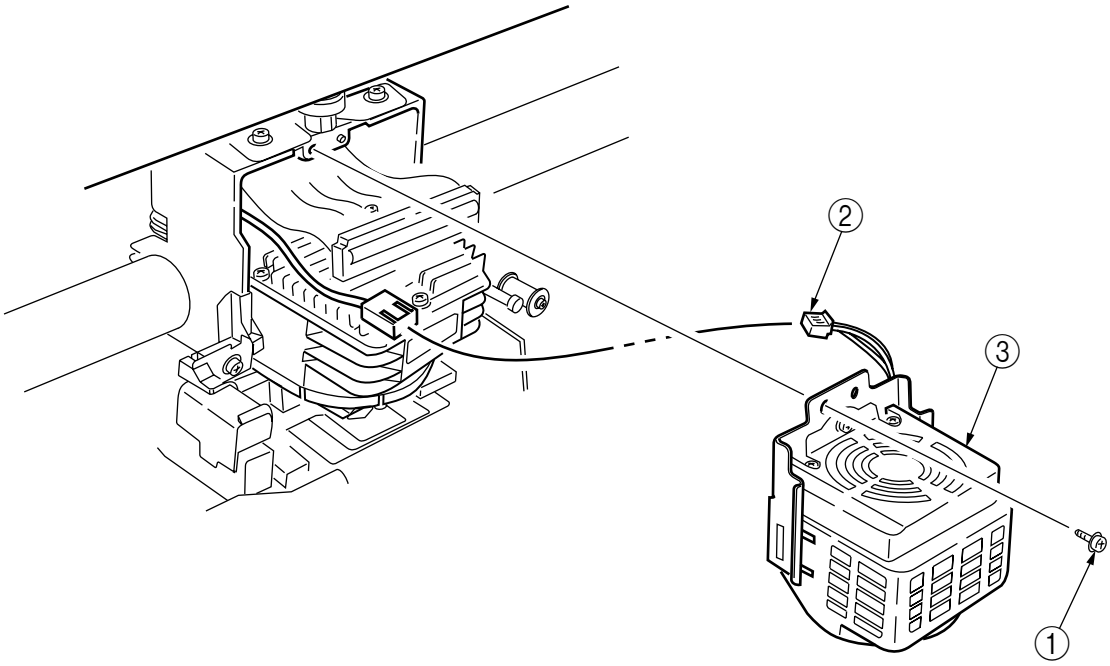

7.2.29 LCD bracket assembly

1) Remove the top cover, side cover (L), side cover (R), and rear cover. (See Section 7.2.1)
2) Disconnect the three connectors ③ from CN4, CN10 of the relay board ① and sensor assembly cover open ②.
3) Remove the two screws ④, then remove the LCD bracket assembly.
4) Reinstall the LCD bracket assembly in the opposite sequence to removal.

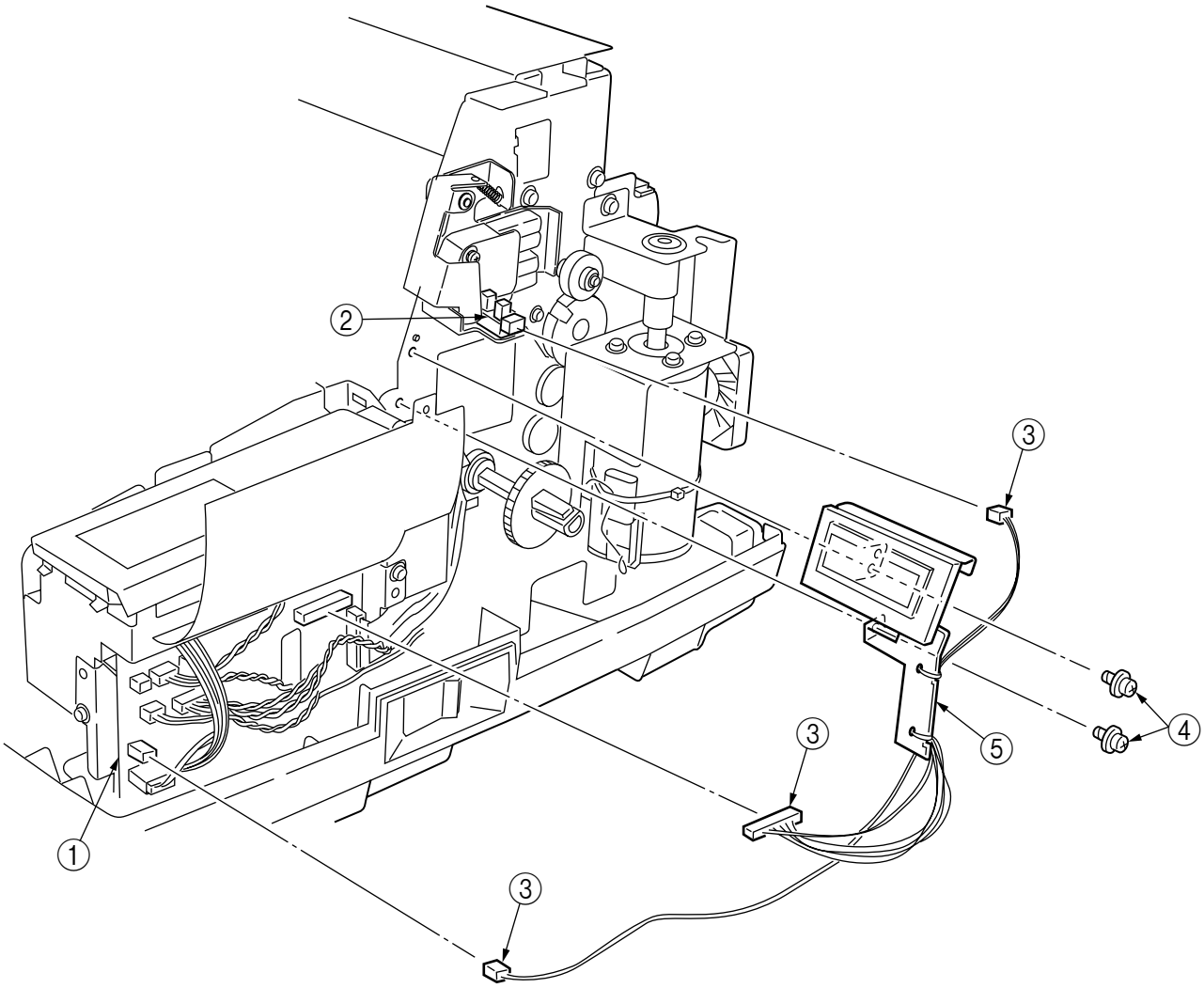

7.2.30 CSF sensor assembly

1) Remove the top cover, side cover (L), side cover (R), and rear cover. (See Section 7.2.1)
2) Lift the printer unit. (See Section 7.2.2)
3) Disconnect the connector ② from CN6 of the I/F board ②.
4) Disconnect the cord from the cord clamp ③.
5) Remove the screw ④, then remove the CSF sensor assembly ⑤.
6) Reinstall the CSF sensor assembly in the opposite sequence to removal.

(Precautions upon installing)

1. Run the cord under the stud when installing.
2. Set the hook portion of the spring for the CSF lever on the chamfered portion indicated by an arrow.

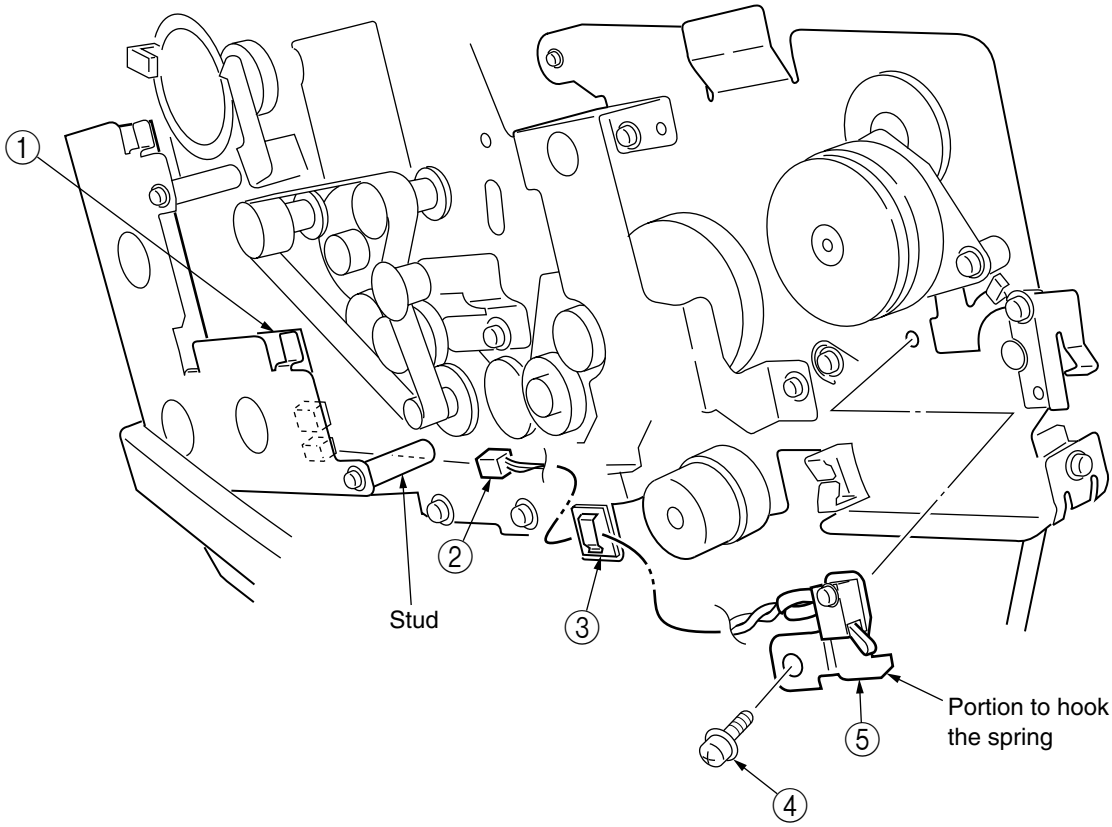

7.2.31 SP motor fan

1) Remove the top cover, side cover (L), side cover (R), and rear cover. (See Section 7.2.1)
2) Disconnect the connector ② from CN13 of the relay board ①.
3) Disconnect the cord from the three cord clamp ③.
4) Remove the screw ④, then remove the SP motor fan ⑤.
5) Reinstall the SP motor fan in the opposite sequence to removal.

(Precautions upon installing)

1. Reinstall so that the wind from the fan blows in the direction of the SP motor (direction of the arrow in the figure).

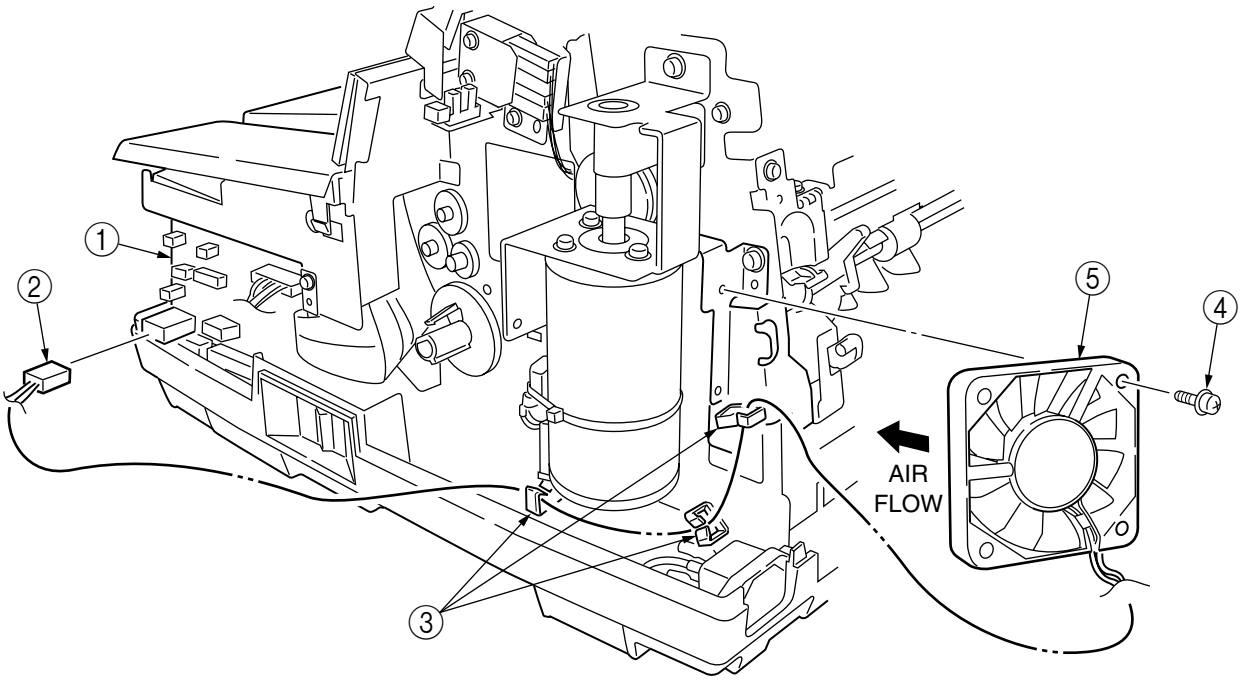

7.2.32 Stage open sensor assembly

1) Remove the top cover, side cover (L), side cover (R), and rear cover. (See Section 7.2.1)
2) Lift the stage unit ①.
3) Remove the claw and lift the operation unit board assembly ②.
4) Remove the five screws ③, then remove the shield plate ④.
5) Disconnect the connector ⑥ from CN8 of the relay board ⑤.
6) Disconnect the cord from the saddle edge ⑦.
7) Remove the screw ⑧, then remove the stage open sensor assembly ⑨.
8) Reinstall the stage open sensor assembly in the opposite sequence to removal.

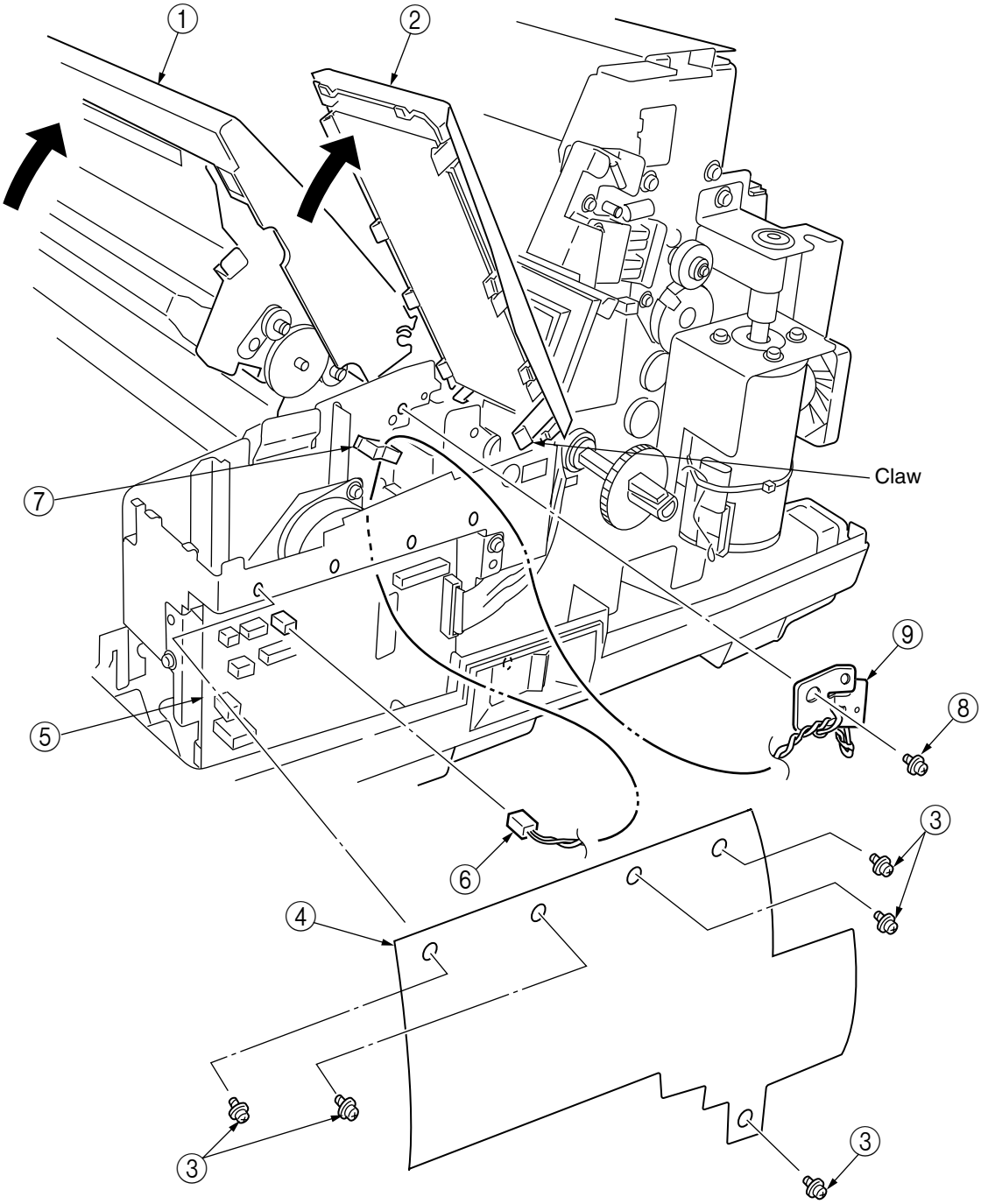

7.2.33 CSF paper detection sensor

1) Remove the center guide. (See Section 7.2.13②)
2) Open the stage and remove the five screws ①, then remove the stage assembly ②.
3) Remove the screw ③, then remove the center bracket ④.
4) Release the two lock portions of the CSF paper detection sensor ⑤, then lift and remove the sensor.
5) Disconnect the connector.
6) Reinstall the CSF paper detection sensor in the opposite sequence to removal.

(Precautions upon installing)

1. Hold the front portion of the stage assembly ② and pull it toward the front.
2. When reinstalling, set the leading edge of the sensor to the hook portion of the sheet guide and lower the front portion.

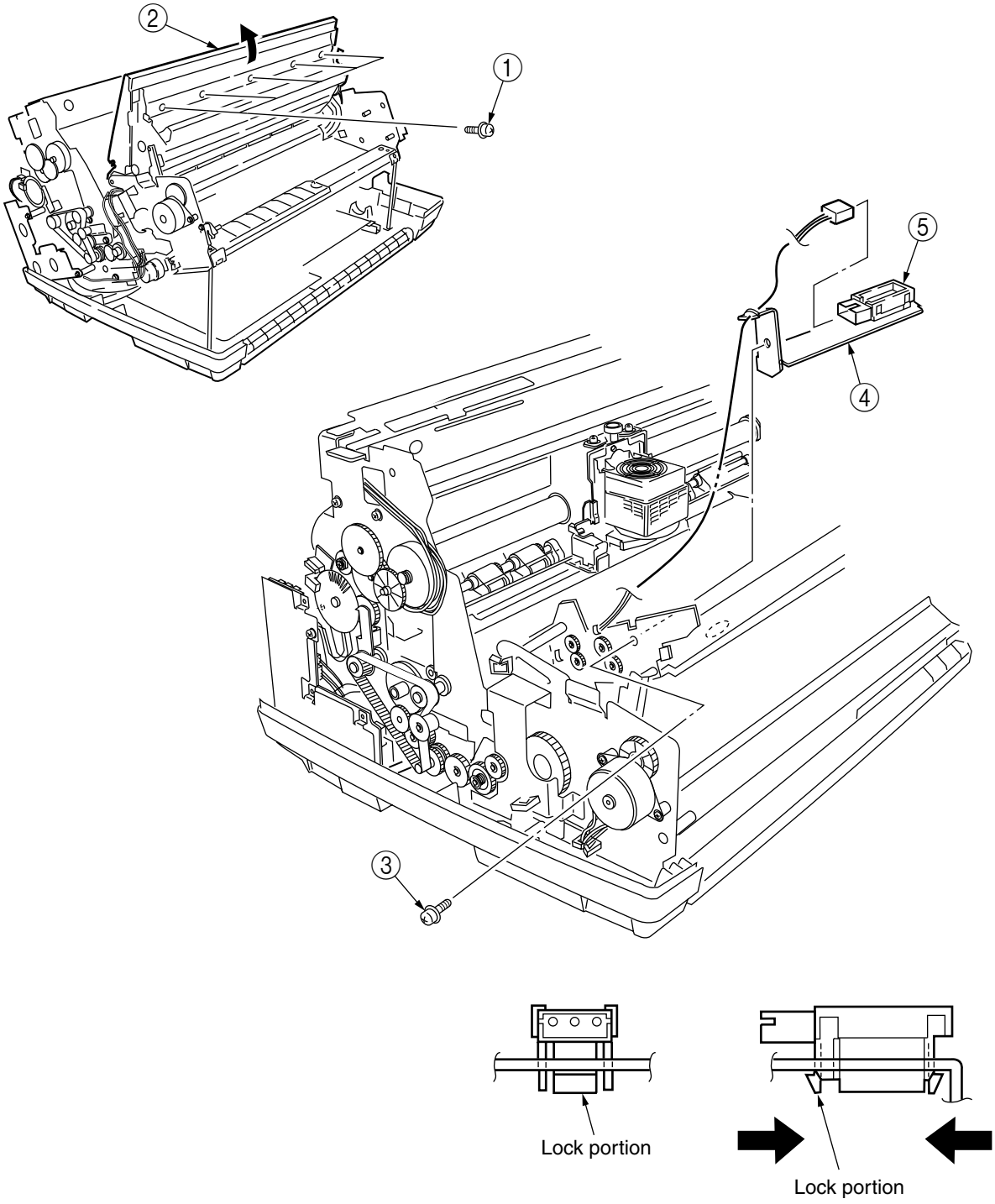

7.2.34 Rear tractor gear assembly

1) Remove the top cover, side cover (L), side cover (R), and rear cover. (See Section 7.2.1)
2) Lift the printer unit. (See Section 7.2.2)
3) Remove the three screws ①, then remove the rear tractor gear assembly ②.
4) Reinstall the rear tractor gear assembly in the opposite sequence to removal.

(Precautions upon installing)

1. If the mini pitch belt ③ was removed or reinstalled, be sure to adjust the warp in the belt. (See Section 8.2)

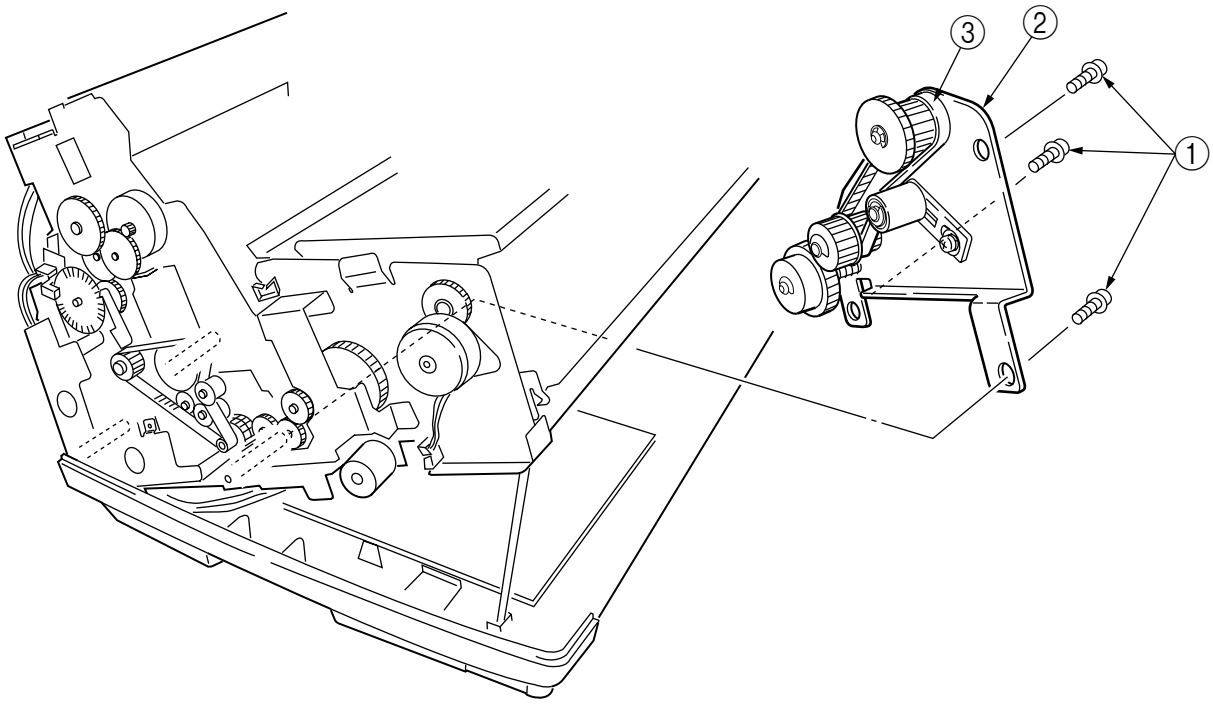

7.2.35 Middle frame bracket (R) assembly

1) Remove the top cover, side cover (L), side cover (R), and rear cover. (See Section 7.2.1)
2) Lift the printer unit. (See Section 7.2.2)
3) Remove the space motor fan. (See Section 7.2.27)
4) Remove the three screws ①.
5) Push the middle frame bracket assembly (R) in the direction of the arrow [A], remove it from the post, then remove it by pushing it back.
6) Disconnect the connector from the relay board ③.
7) Reinstall the middle frame bracket assembly in the opposite sequence to removal.

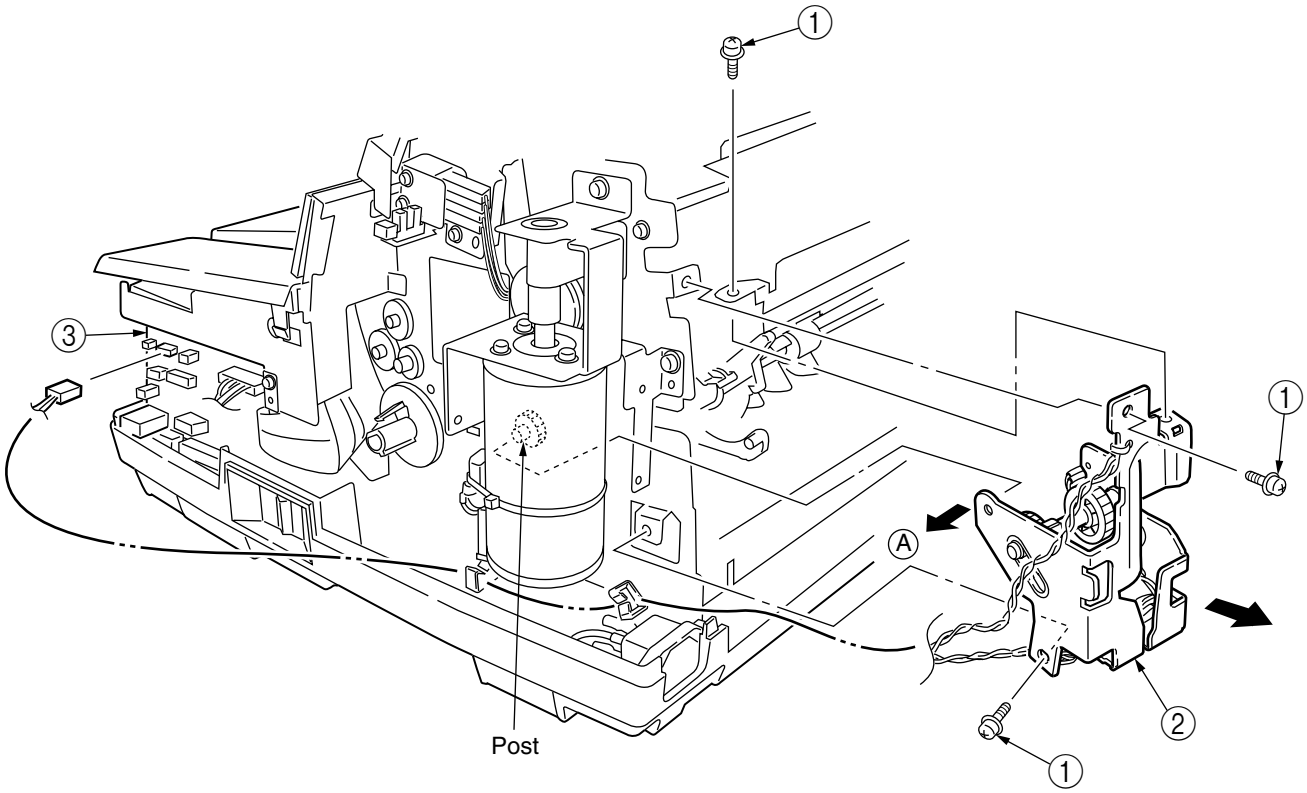

7.2.36 Rear sensor bracket assembly

1) Remove the top cover, side cover (L), side cover (R), and rear cover. (See Section 7.2.1)
2) Lift the printer unit. (See Section 7.2.2)
3) Disconnect the connector from the relay board ①.
4) Remove the two screws ②, then remove the rear PE sensor assembly ③ and JAM sensor assembly ④.
5) Disconnect the cord from the cord clamp ⑤.
6) Reinstall the rear sensor bracket assembly in the opposite sequence to removal.

(Precautions upon installing)

1. When reinstalling the rear PE sensor assembly ③ and JAM sensor assembly ④, be sure that the convex portions of the sensor bracket are securely set in the holes of the lower shaft.

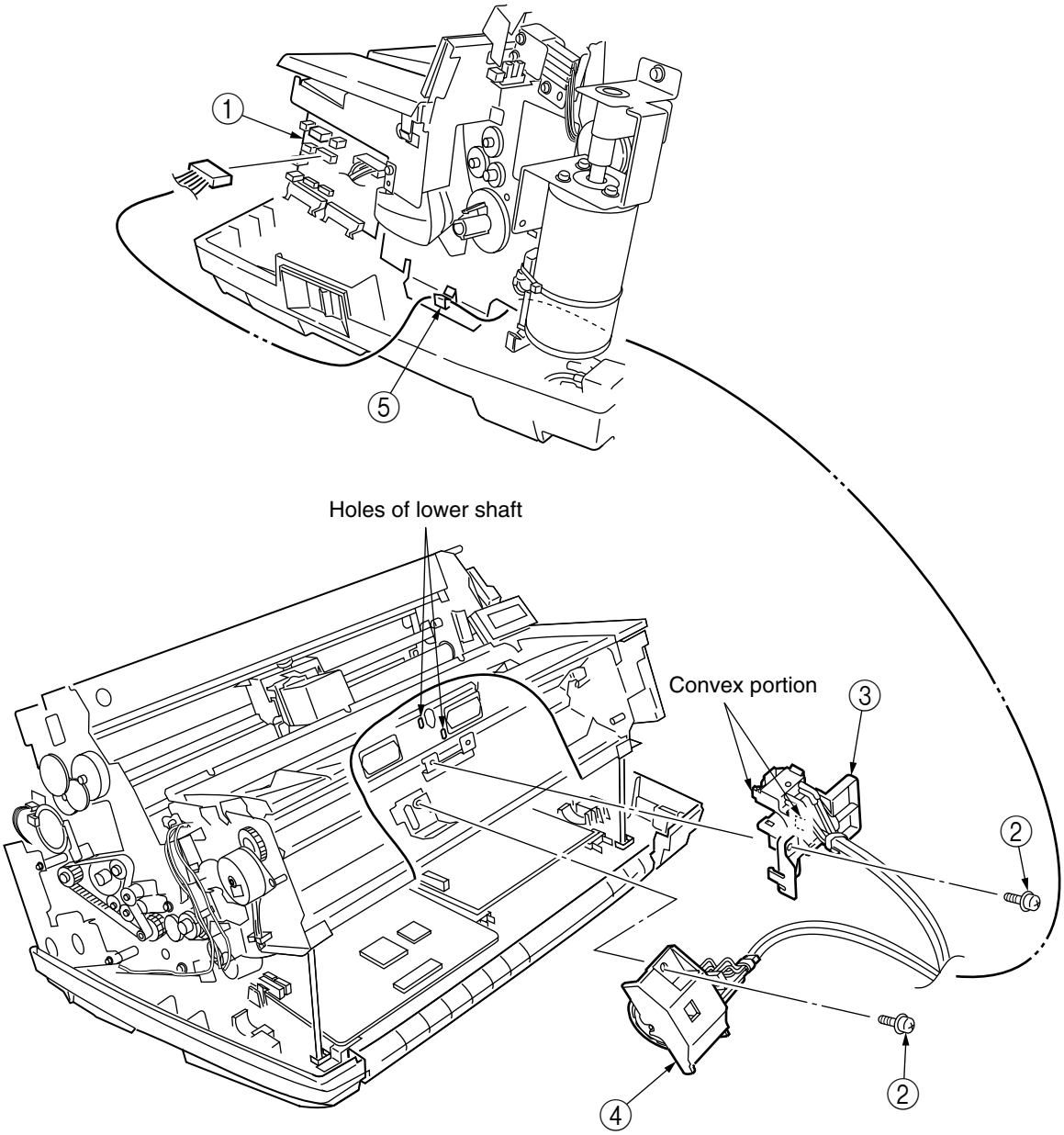

7.2.37 Removing the printer unit

1) Remove the top cover, side cover (L), side cover (R), and rear cover. (See Section 7.2.1)
2) Remove the two screws securing the front section of the printer unit ①, then remove the fixture metal ③.
3) Remove the two screws securing the rear section of the printer unit ①, then remove the plate bolts ⑤ and ⑥.
4) Remove the ground wire screw ⑦ of the side frame in the rear right side, then remove the ground wire ⑧.
5) Lift the printer unit ①. (See Section 7.2.2)
6) Disconnect all the connector cords from the control unit ⑨.
7) Hold the bending portions ⑩ on both sides along with both posts, lift up the printer unit and remove it from the lower cover ⑪. (The lower portion of the operator panel on the right side can also be held.)

CAUTION!

Be sure that the printer unit ① is removed by two or more people.

8) Reinstall the printer unit in the opposite sequence to removal.

(Precautions upon installing)

1. Be sure that the printer unit ① is removed and reinstalled by two or more people. Also be sure that the cords or cables are not caught when setting the removed printer unit ①.
2. When reinstalling the printer unit ①, place the rubber foot ⑫ of the printer unit ① on the groove of the lower cover ⑪. Be sure again that the cords or cables are not caught when setting the printer unit.

   After setting the printer unit ① on the lower cover ⑪, set up the stand shaft vertically so that the printer unit ① is lifted.
3) Secure the ground wire terminal ⑧ on the right side between the inlet portion and screw ⑦.
4. Confirm that the ground plate attached on the back of the lower cover is set within the printer unit ①.

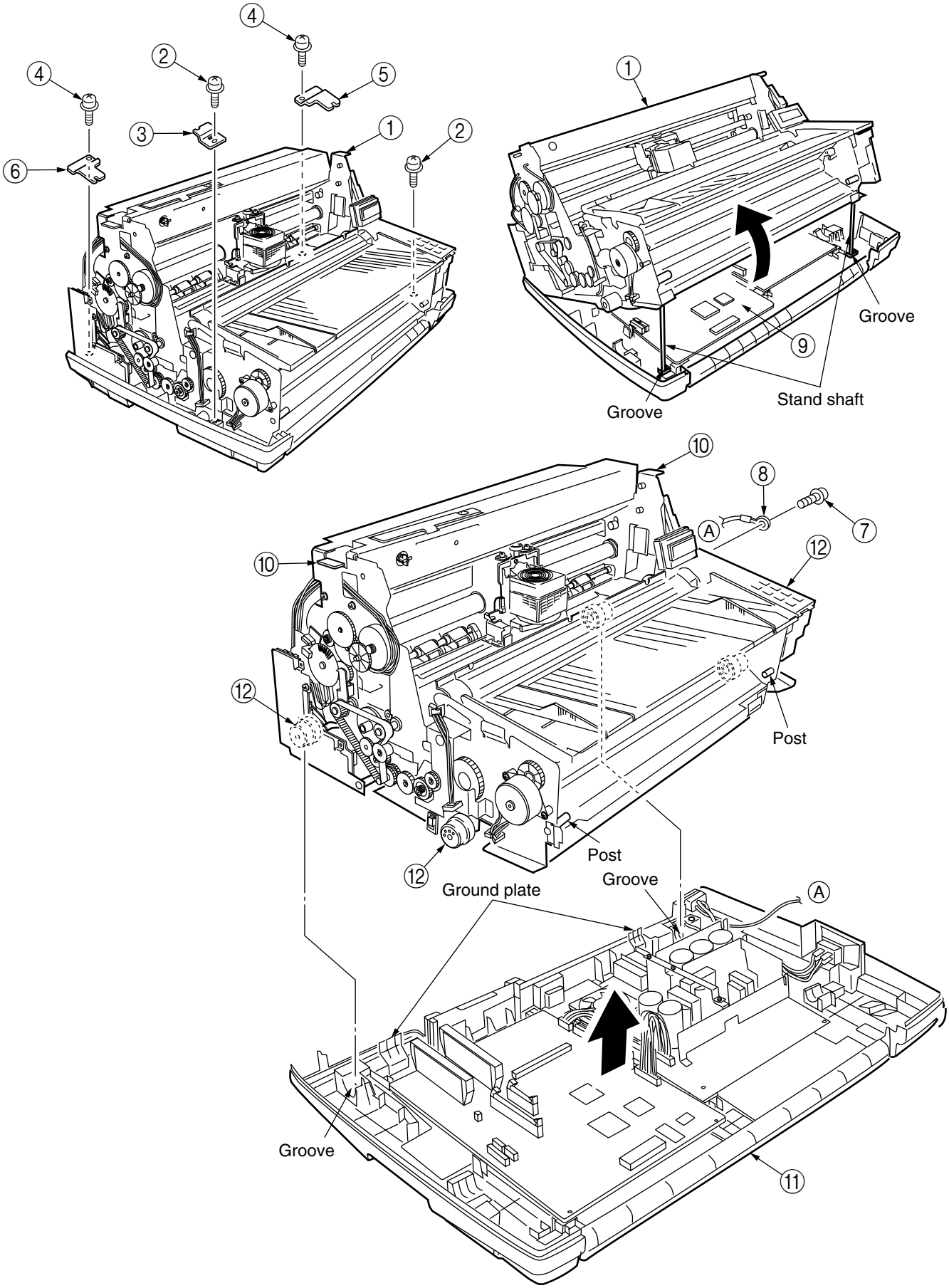
4
2
4
5
3
1
2
6
1
Groove
9
Stand shaft
Groove
10
8
A
7
10
12
12
Post
Post
12
Ground plate
Groove
A
Groove
11

7.2.38 Front PE sensor assembly

1) Remove the top cover, side cover (L), side cover (R), and rear cover. (See Section 7.2.1)
2) Remove the printer unit. (See Section 7.2.37)
3) Set up the printer unit ① vertically.

CAUTION!

Be careful not to deform the springs of the interface and connector.

4) Remove the screw ②, then remove the front PE sensor assembly ③.
5) Reinstall the front PE sensor assembly in the opposite sequence to removal.

(Precautions upon installing)

1. When reinstalling the front PE sensor assembly ③, be sure that the convex portions of the sensor bracket are securely set in the holes of the lower sheet guide.

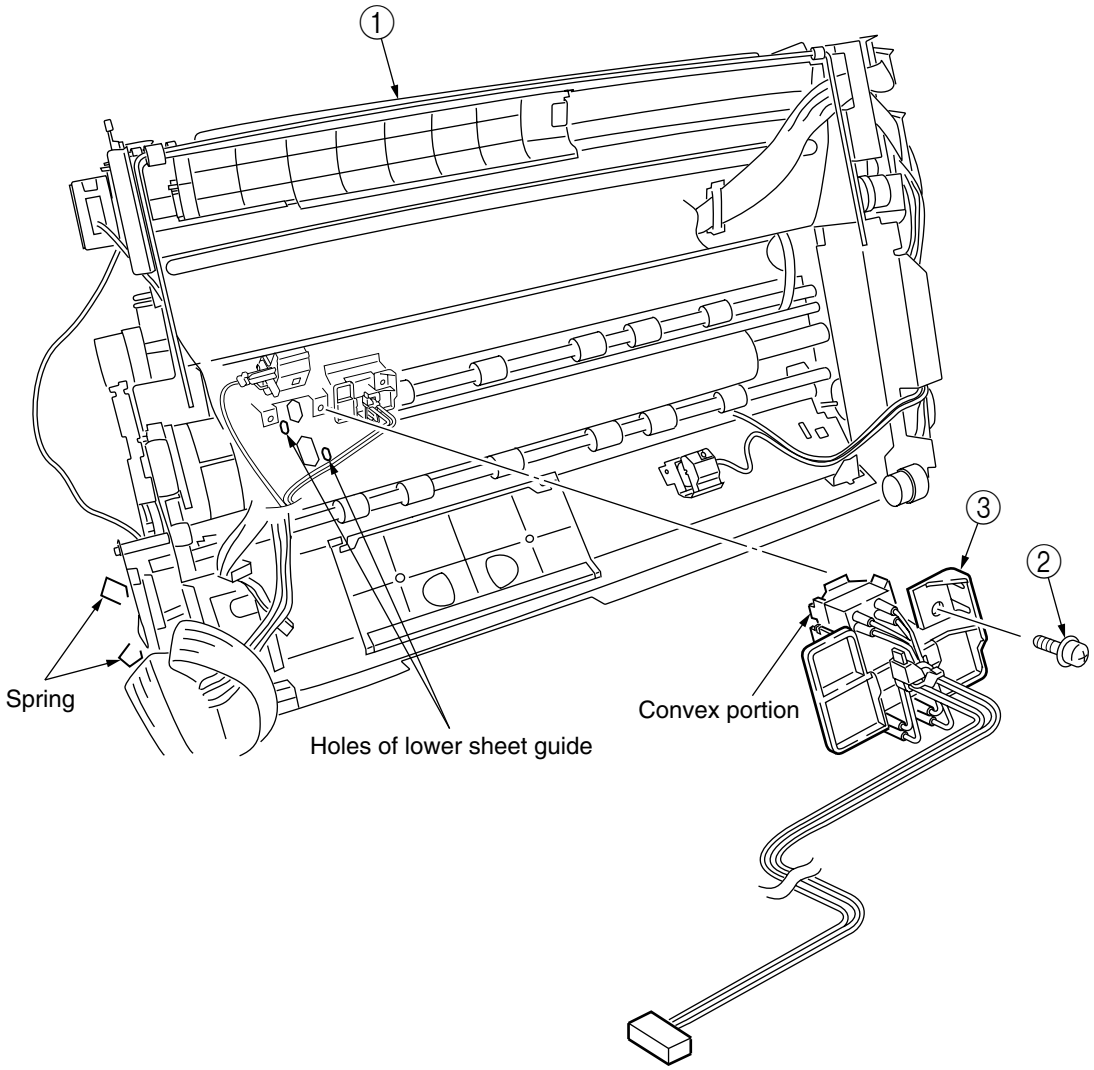

7.2.39 Front sensor bracket assembly

1) Remove the top cover, side cover (L), side cover (R), and rear cover. (See Section 7.2.1)
2) Remove the printer unit. (See Section 7.2.37)
3) Set up the printer unit ① vertically.

CAUTION!

Be careful not to deform the springs of the interface and connector.

4) Remove the two screws ②, then remove the front sensor assembly ③ and JAM sensor assembly ④.
5) Reinstall the front sensor bracket assembly in the opposite sequence to removal.

(Precautions upon installing)

1. When reinstalling the front PE sensor assembly ③ and JAM sensor assembly ④, be sure that the convex portions of the sensor bracket are securely set in the holes of the lower sheet guide.

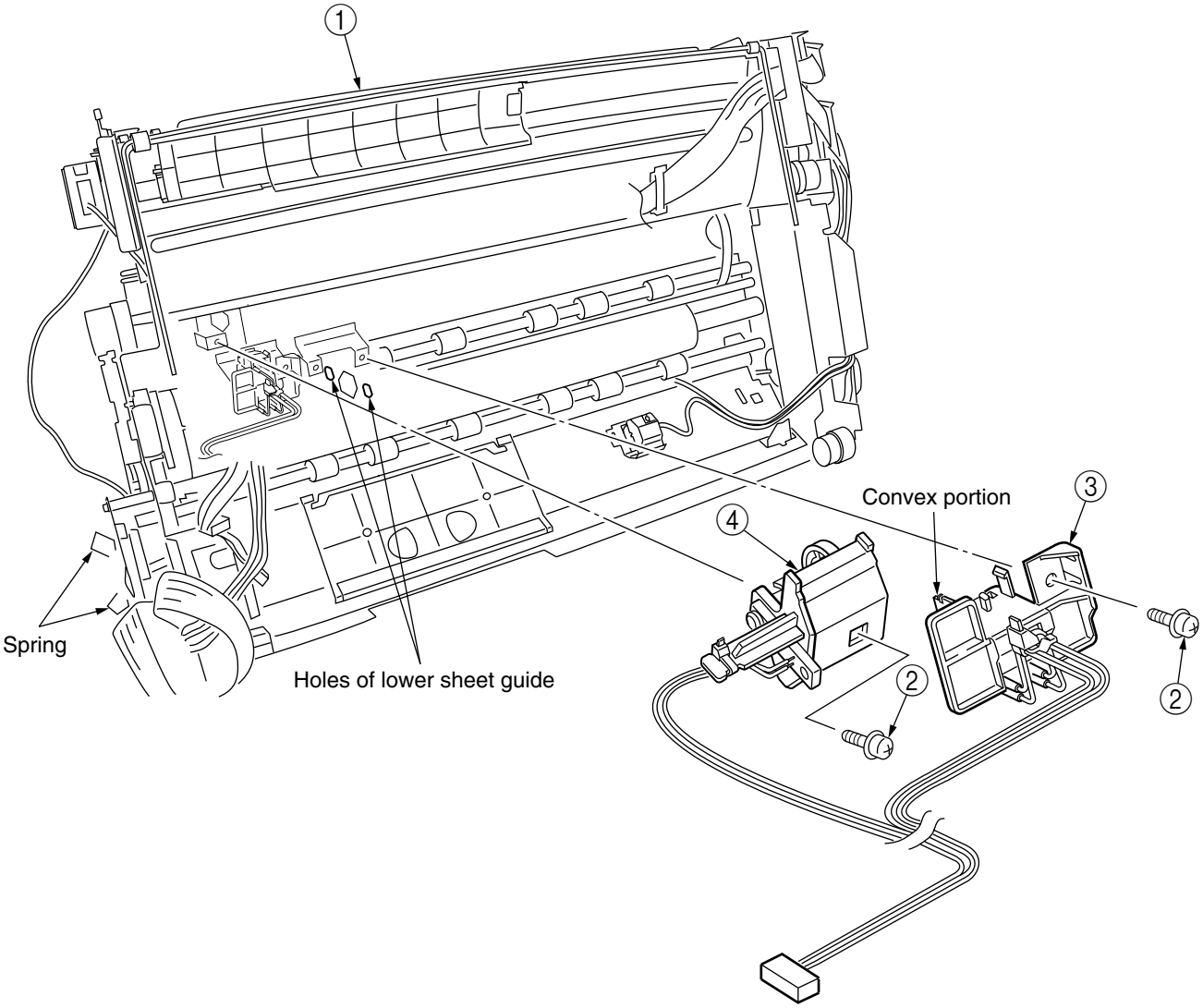

7.2.40 Head cable assembly

1) Remove the top cover, side cover (L), side cover (R), and rear cover. (See Section 7.2.1)
2) Remove the print head. (See Section 7.2.14)
3) Lift the printer unit. (See Section 7.2.2)
4) Disconnect all the connectors ①.
5) Remove the screw ②, remove the cable guide ③, then remove the two plates ④.
6) Remove the I/F board. (See Section 7.2.20)
7) Remove the two screws ⑥, then remove the head cable assembly ⑦ toward the rear.
8) Disconnect the connector ⑧ from the control board.
9) Reinstall the head cable assembly in the opposite sequence to removal.

(Precautions upon installing)

1. A space of 0.5 to 1.5mm should exist in the bent portion between the head cable and cable film.
2. The head cable and side plate should match when the carriage is moved to the right.

(Precautions upon reinstalling)

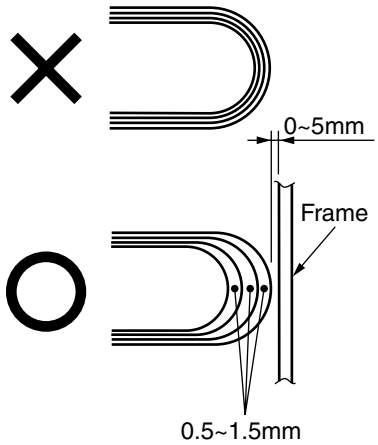

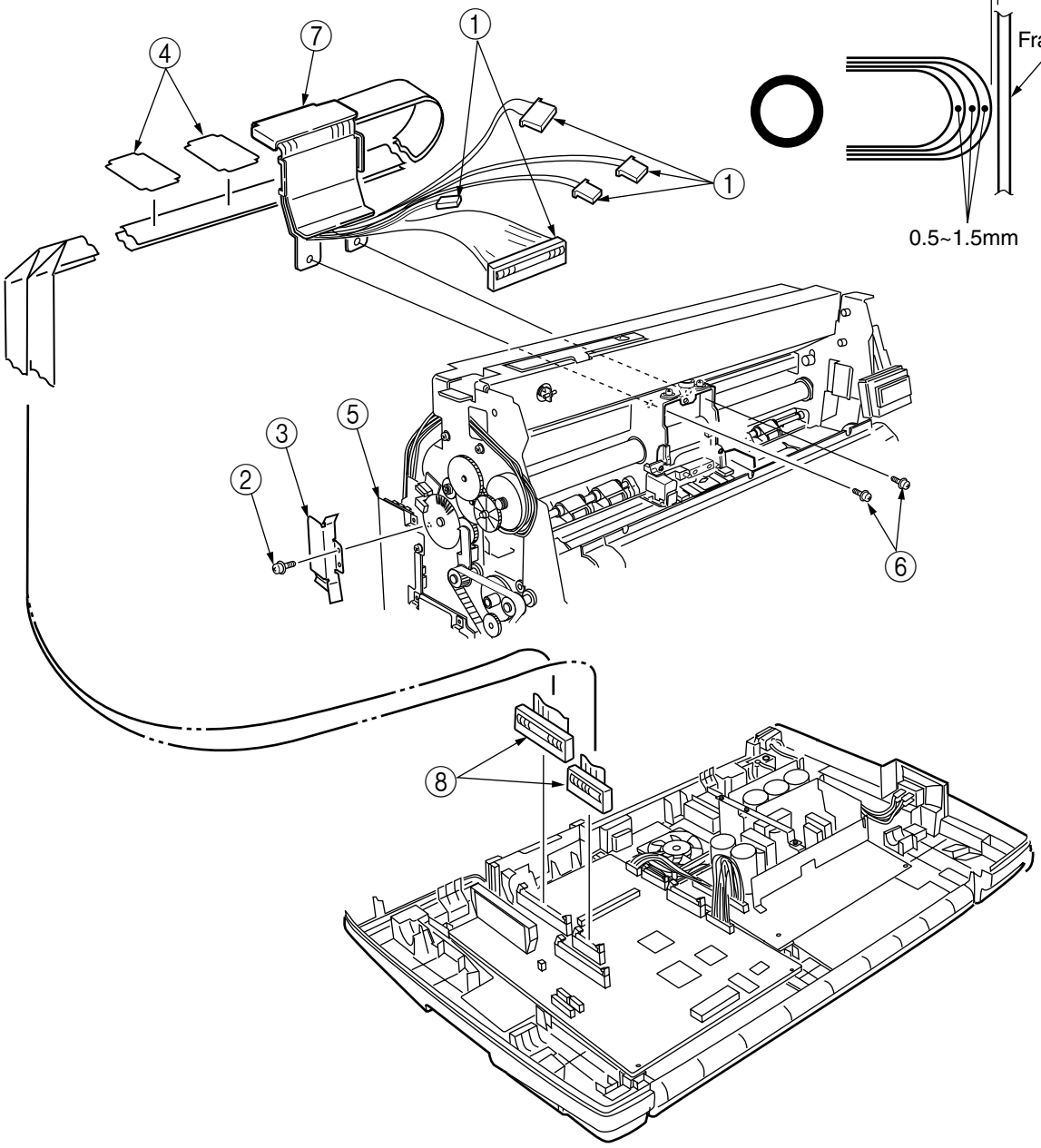

8. ADJUSTMENT

- Adjustment must be performed with the printer unit installed on the lower cover.
- Adjustment must be performed on an assembly table (flatness of 1mm or less) with sufficient solidity thus maintained horizontally.
- Corrections and adjustments of each functions in this chapter are memorized in EEPROM. All corrections and adjustments must be performed when replacing parts due to EEPROM abnormality.

The following items must be confirmed and/or adjusted.

Section No.	Confirm Only	Adjust	
		After replacing parts	For new EEPROM
8.1 Adjusting the Line Feed Belt		○	
8.2 Adjusting the Line Feed Belt (for rear tractor)		○	
8.3 Setting the Dip Switch			
8.4 Confirming the Gap Between the Platen and Block	○	○	
8.5 Correcting the Amount for Auto Paper Weight Adjustment		○	○
8.6 Adjusting the Paper Start Position Upon Auto-Loading			○
8.7 Adjusting the Paper Cut Position			
8.7.1 Adjusting in the front tractor method			○
8.7.2 Adjusting in the rear tractor method			○
8.8 Adjusting the Horizontal Print Position	○	○	○
8.9 Adjusting the Line Feed Pitch for Cut-Sheets			○
8.10 Adjusting the Skew Sensor		○	○
8.11 Adjusting the Sensors			
8.11.1 Sensor check	○		
8.11.2 Slice level learning function of sensors	○	○	○
8.11.3 Confirming the voltage level of sensors	○		

8.1 Adjusting the Line Feed Belt

Required tools

- 500g bar-type pressure gauge
- No.2-200 Phillips screwdriver
- Vernier caliper

Adjusting method

1) Turn OFF the power switch and disconnect the AC plug from the outlet.
2) Remove the top cover, side cover (L), side cover (R), and rear cover. (See Section 7.2.1)
3) Lift the printer unit. (See Section 7.2.2)
4) Confirm that the load when warping the belt 2mm in between the continuous pulley and motor pulley is in the range of 200g to 250g. Also confirm that the backlash with the change gear is in the range of 0.05 to 0.1.
5) When adjustment is required, loosen the set screw of the continuous LF motor and adjust the position of the continuous LF motor so that the backlash with the change gear is in the range of 0.05 to 0.1.

   Furthermore, loosen the set screw of the idle pulley assembly and adjust the position of the idle pulley assembly so that the load is in the range of 150g to 250g when the belt is warped 1.5mm.

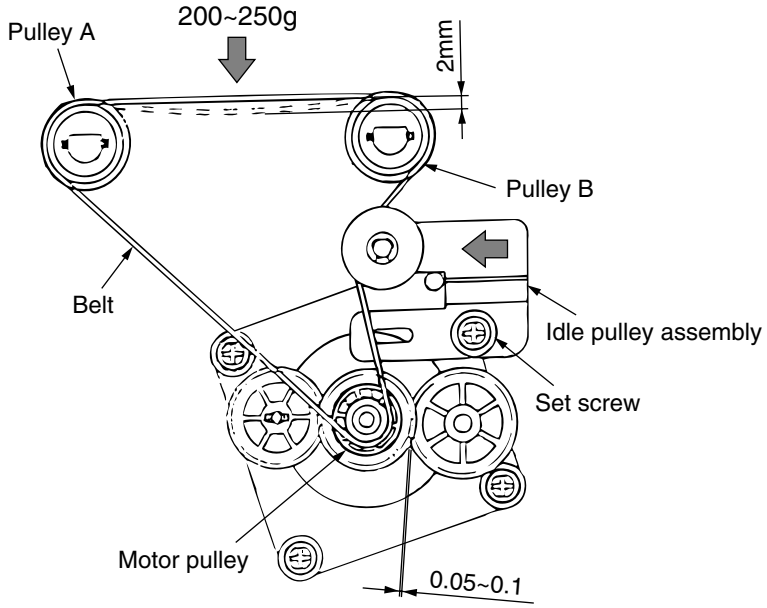

Figure 8-1

8.2 Adjusting the Line Feed Belt (For rear tractor)

Required tools

- 500g bar-type pressure gauge
- No.2-200 Phillips screwdriver
- Vernier caliper

Adjusting method

1) Turn OFF the power switch and disconnect the AC plug from the outlet.
2) Remove the top cover, side cover (L), side cover (R), and rear cover. (See Section 7.2.1)
3) Lift the printer unit. (See Section 7.2.2)
4) Remove the rear tractor assembly. (See Section 7.2.34)
5) Confirm that the load when warping the belt 2mm in between pulley A and pulley B is in the range of 120g to 150g.
5) When adjustment is required, loosen the set screw of the idle pulley assembly and adjust the position of the idle pulley assembly so that the load when warping the belt 2mm in between pulley A and pulley B is in the range of 120g to 150g.

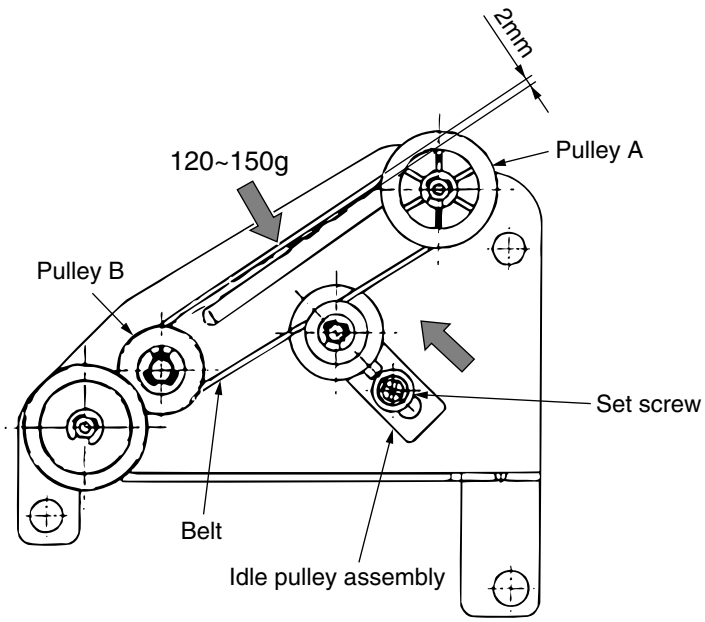

Figure 8-2

8.3 Setting the Dip Switch

Dip switches (DIP SW) for setting the operating functions (normal functions and maintenance functions) of the printer are located in the control unit.

DIP SW should be set with the table and front cover opened.

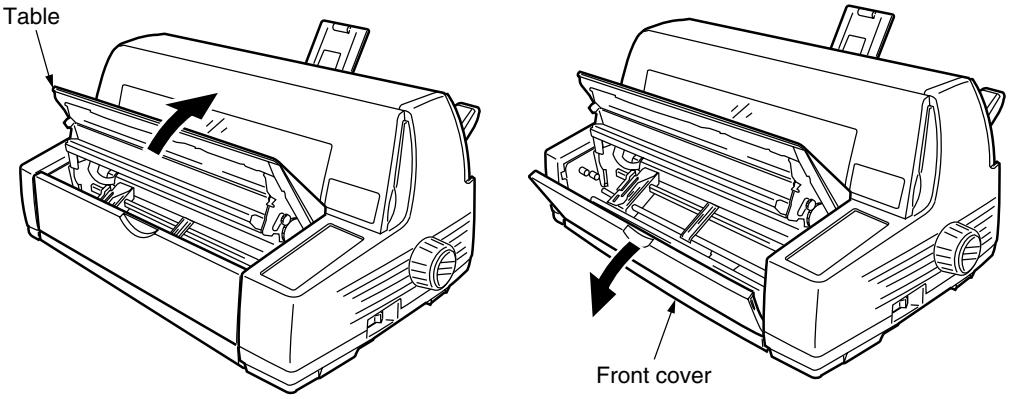

1) Loosen the two screws and remove the front sheet guide. (Tighten the screws securely when reinstalling.)

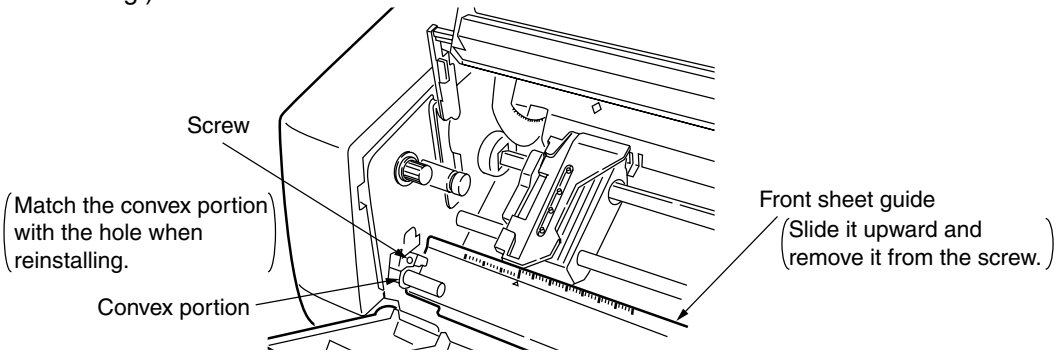

2) Remove the screw from the ROM cover, then slide the ROM cover toward the left and remove it by opening the right side of the cover toward the front.

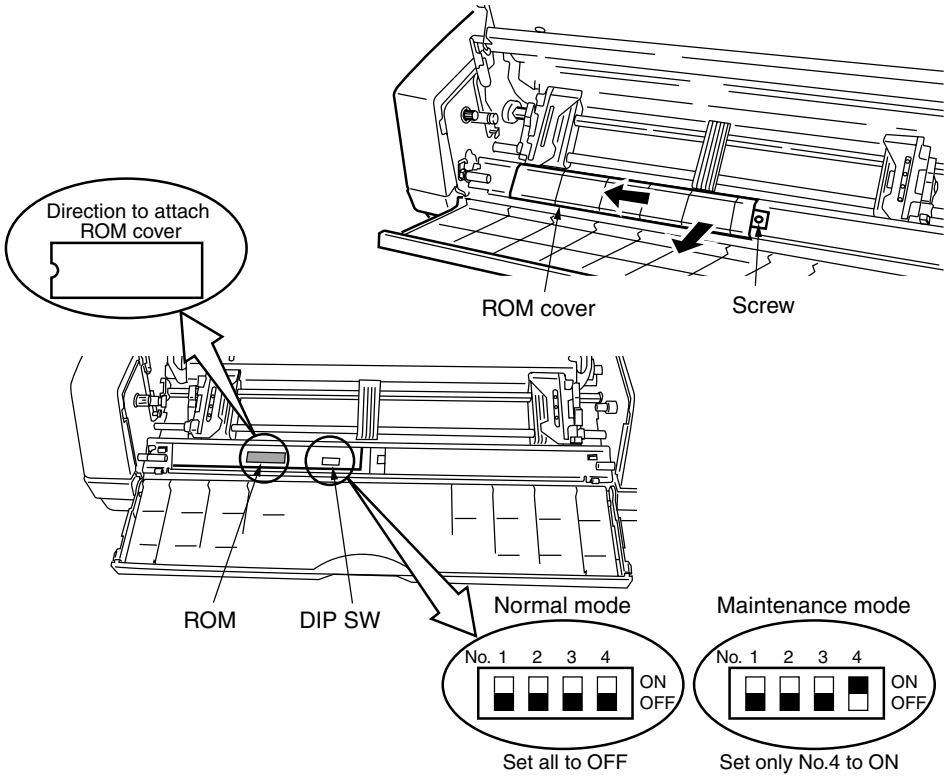

3) Reinstall in the opposite sequence to removal.

8.4 Confirming the Gap Between the Platen and Block

By setting the dip switch (DIP SW No. 4) on the control board to the maintenance side (ON) and performing the next operation, the gap between the print head and platen becomes one range, and the gap between the core block for auto paper weight adjustment and the platen can be confirmed.

Allocation of switches and lamps

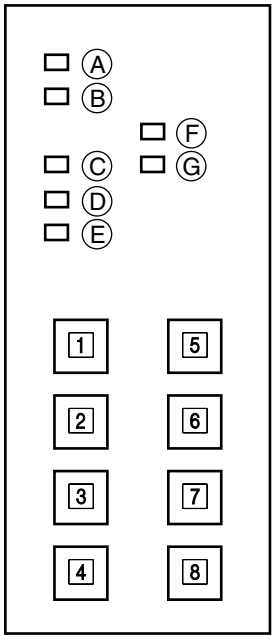

Required tools

- Thickness gauge

Confirmation time

- When abnormalities exist in paper feed, carriage movement, ink ribbon feed, print head movement, and the movement of the auto paper weight adjustment in procedures for repairing.
- After replacing the EI sensor assembly.

Confirming method

1) Turn OFF the power.
2) Set DIP SW No.4 in the control unit to ON. (See Section 8.3)
3) Turn ON the power switch while pressing switches 1 and 2 simultaneously, and keep pressing until [RELEASE SW] is displayed. The print head will move to the position for adjustment.
4) Insert a thickness gauge in the core block portion on the right side of the ribbon protector after moving the carriage to the left and right, and confirm that the gap between the platen and core block is in a range of 0.1mm to 0.16mm.

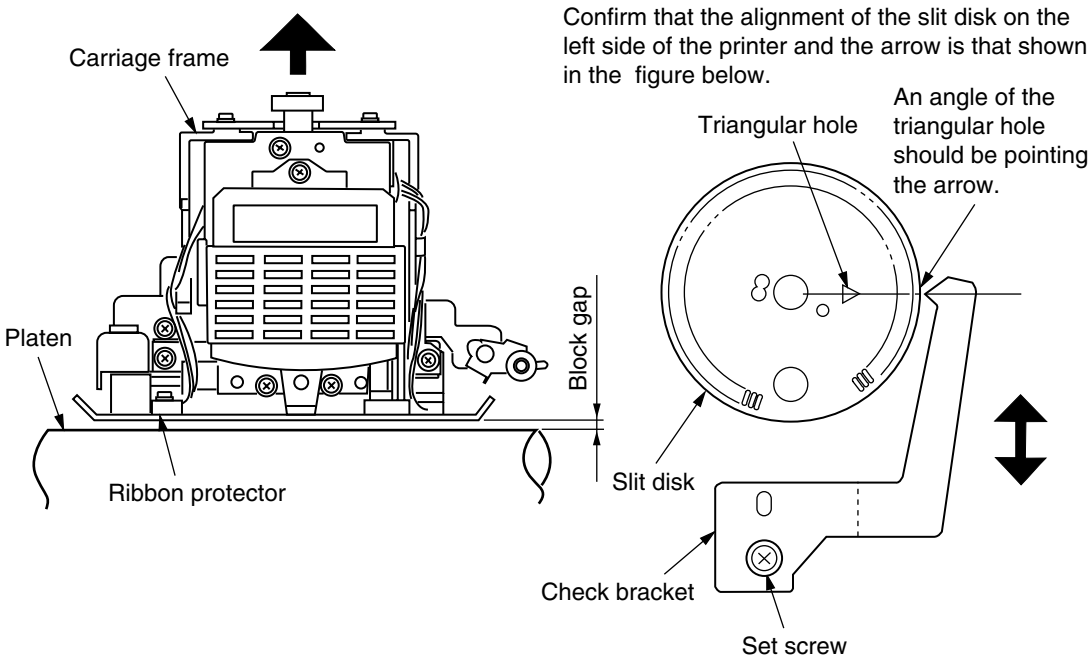

Figure 8-3

8.5 Correcting the Amount for Auto Paper Weight Adjustment

By setting the dip switch (DIP SW No. 4) on the control board to the maintenance side (ON) and performing the next operation, the amount of auto paper weight adjustment will be corrected automatically. (Preset the DIP SW before turning ON the power.)

Confirmation time

- When abnormalities exist in paper feed, carriage movement, ink ribbon feed, print head movement, and the movement of the auto paper weight adjustment in procedures for repairing.
- After replacing the EI sensor assembly.
- Upon EEPROM abnormalities.

Confirming method

1) Turn OFF the power.
2) Set DIP SW No.4 in the control unit to ON. (See Section 8.3)
3) Switch to the continuous mode by pressing the switch in the operator panel during off-line, then set a stack of cut-sheets of ream weight 55kg in the pin tractor.
4) Press switch [4] and set paper by auto loading.
5) When turning OFF the power temporarily, and then turning ON the power again while pressing switches [6] and [7] simultaneously, the following operation of measuring the paper weight will be performed 15 times repeatedly.

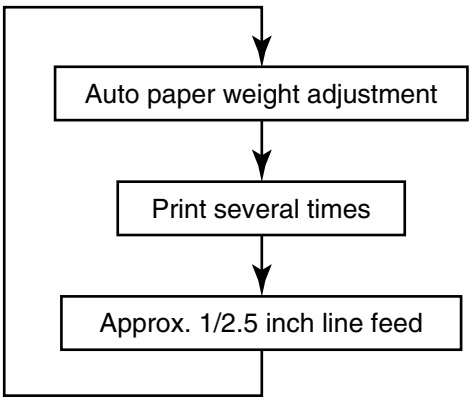

Allocation of switches and lamps

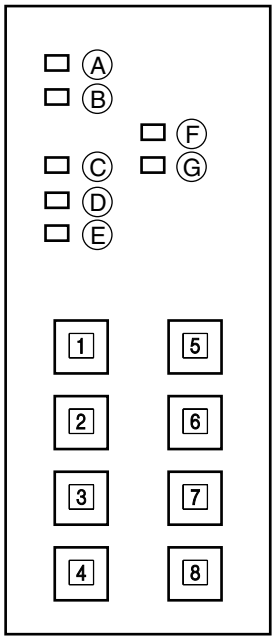

6) When the operation is completed, [AV. = “Corrected Value”] will be printed, and the average value of 15 measurement data will be calculated automatically and registered as the standard value for the proceeding auto paper weight adjustments.

   The desired [AV=” “] value is from 008 to 032.

CAUTION! Perform this adjustment in the following cases:

- After replacing the platen.
- After replacing the EI sensor assembly. (Adjustment is not required when replacing the control board as EEPROM used in the old board could be inserted and used.)
- When the correction value of [AV=” “] 61 or above or 8 or below, or when the difference between the AV value and value corrected 15 times (max, min) is 5 or above, the Ⓑ lamp will blink but it could be released by pressing switch [1].

8.6 Adjusting the Paper Start Position Upon Auto-Loading

By setting the dip switch (DIP SW No. 4) on the control board to the maintenance side (ON) and performing the next operation, the paper start position upon auto-loading continuous and cut-sheets can be corrected. In this case, the position in which the trailing edge of the paper is detected will also be corrected.

(The start position will be corrected when the dip switch (DIP SW No. 4) is also set to the normal side (OFF), but the position for the trailing edge detection will not be corrected.)

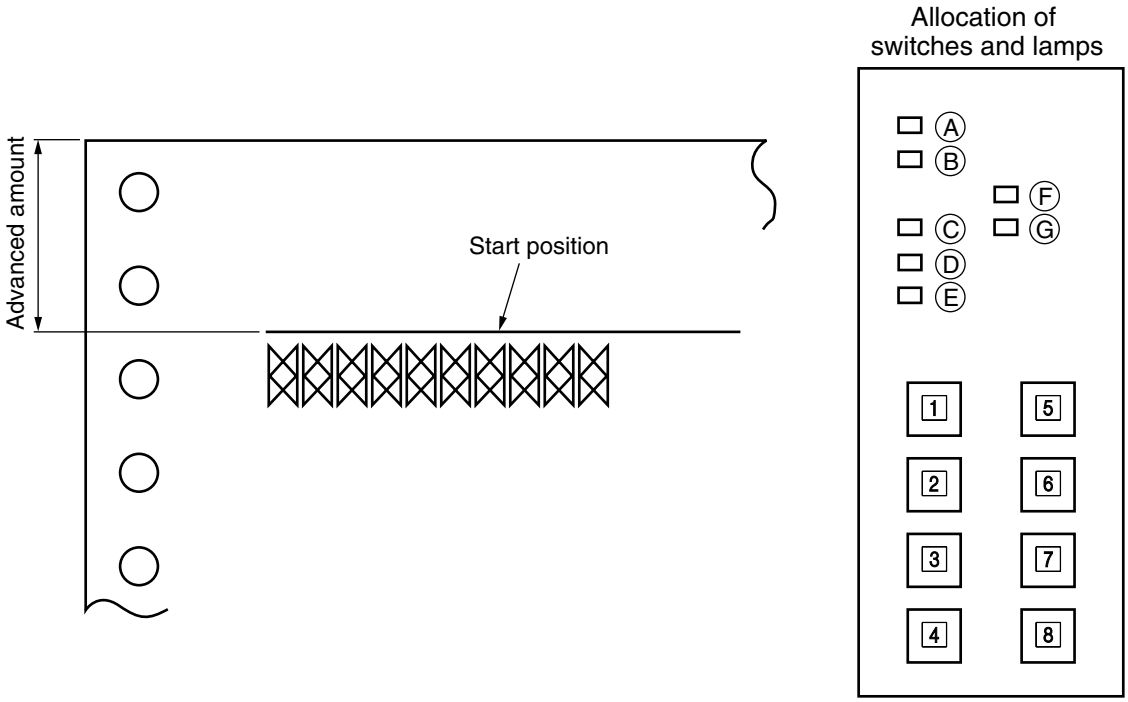

Confirmation time

- To correct skewed sensor position resulting from replacing the PE sensor.
- When difference exists in the default setting of the advanced amount and print position in auto loading.
- Upon EEPROM abnormalities.

Correcting method

1) Correcting the start position for continuous paper (valid only upon front/rear tractor push-in system)
   a) Refer to “9.1 Selecting the Test Mode” and perform test prints.
   b) Confirm that the paper start position is within the regulated value.

   If it is not in the regulated value, make corrections following the instructions in (4). A regulated value indicates the [TOF] value in the menu.

2) Correcting the start position of cut-sheets upon manual-feed
   a) Refer to “9.1 Selecting the Test Mode” and perform test prints.
   b) Confirm that the paper start position is within the regulated value.

   If it is not in the regulated value, make corrections following the instructions in (4).

3) Correcting the start position of cut-sheets upon auto-feed
   a) Attach a cut-sheet feeder, refer to “9.1 Selecting the Test Mode” and perform test prints.
   b) Confirm that the paper start position is within the regulated value.

   If it is not in the regulated value, make corrections following the instructions in (4).

4) Press switch [4] and set paper for auto-loading.

Continue pressing switch [4] even after the auto-loading operation is completed, then when pressing switches [2] and [3] while pressing switch [4], the paper start position will be corrected.

- When pressing switch [2] while pressing switch [4], paper will be fed in the forward direction up to maximum 40/120in. max. in a pitch of 1/120in.
- When pressing switch [3] while pressing switch [4], paper will be fed in the reverse direction up to maximum 40/120in. max. in a pitch of 1/120in.
- The paper position at the time the switches are released becomes the new paper start position.

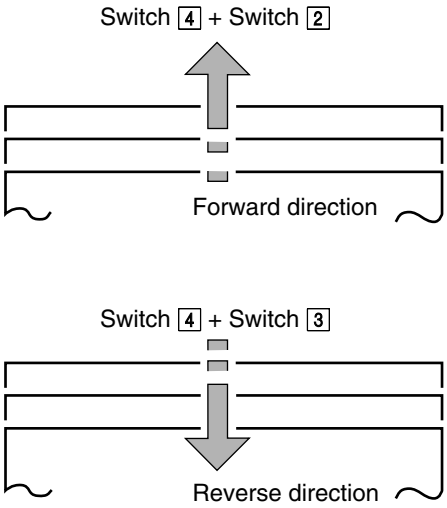

CAUTION!

- Lamp Ⓑ will blink when the adjustment is being performed. When the adjustment value reaches its maximum or minimum, and further adjustment is disabled, Lamp B will light ON.
- The adjusted value is memorized even when the power is turned OFF.

8.7 Adjusting the Paper Cut Position

By setting the operator panel switch in the following procedures, the paper cutter can be adjusted to the perforated line of the continuous paper when tearing off the paper with the paper cutter. (Valid only during a push-in tractor method.)

8.7.1 Adjusting in the front tractor method

Set the “Tear Off Pos.” of the “Front Feed” group in the menu to “Position 1”.

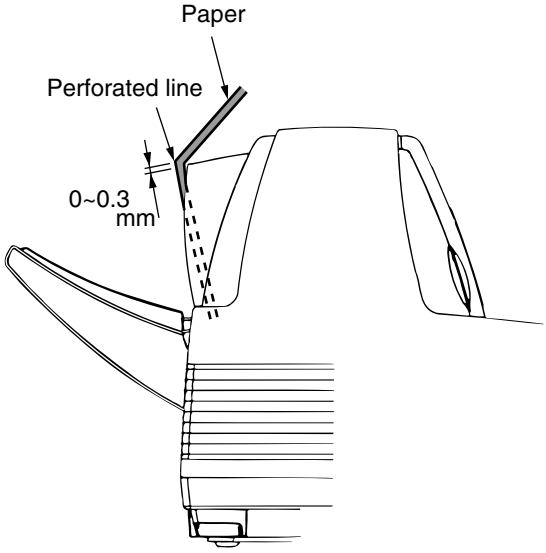

Figure 8-4

Allocation of switches and lamps

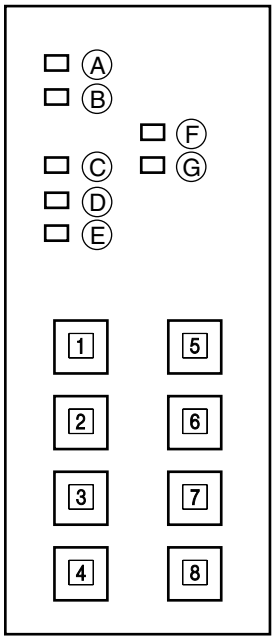

1) Set continuous paper (1P, 55kg., 15in.) on the front tractor and turn ON the power.
2) After pressing Switch [1] and turning OFF Lamp Ⓔ, press Switch [2] and feed the page.
3) Press Switch [1] and enter a printable mode. Lamp Ⓔ will go ON at this time.
4) Press Switch [4] to feed paper to the tear-off position, and confirm that the perforated line is within the regulated range.

If the perforated line is not within the regulated range, perform the following corrections.

5) Press Switch [4] and remove the paper.
6) Perform Step (4) again, continue pressing Switch [4] even after the adjustment of the paper cut position is completed, press Switches [2] and [3] while pressing switch [4], and correct the tear-off position.

- When pressing Switch [2] while pressing Switch [4], paper will be fed in the forward direction in a pitch of 1/60in.

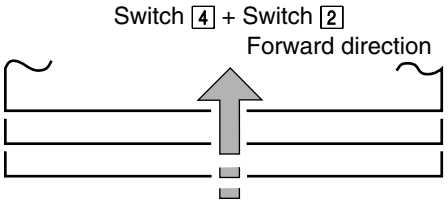

- When pressing Switch [3] while pressing Switch [4], paper will be fed in the reverse direction in a pitch of 1/60in.

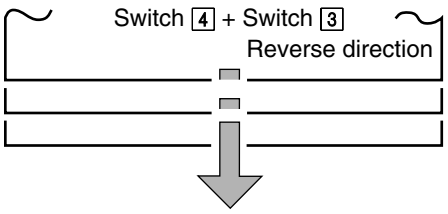

7) Release the switches when the leading edge of the paper matches the tear-off position. The paper position at the time the switches are release will be registered as the new tear-off position.

CAUTION!

- The adjustment range is from +200/60 to -40/60in. LCD display when the tear-off position is being corrected are shown below.

  1. LCD display when correction is enabled in the correction mode

T	E	A	R		O	F	F		P	O	S		A	D	J

  2. LCD display when the correction range is exceeded in the correction mode

T	E	A	R		O	F	F		P	O	S		A	D	J
R	A	N	G	E		O	V	E	R						

- This adjustment is memorized even when the power is turned OFF.

8.7.2 Adjusting in the rear tractor method

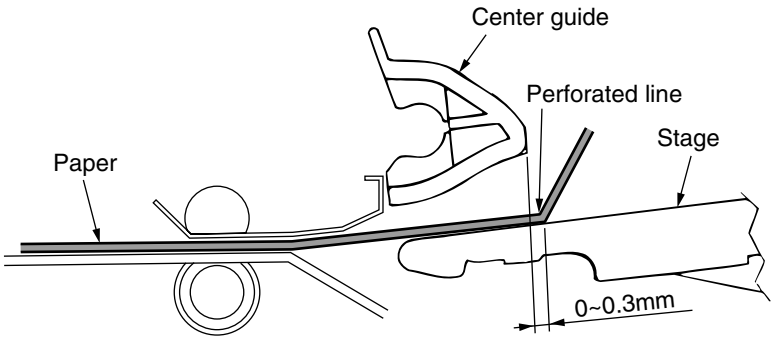

Figure 8-5

Allocation of switches and lamps

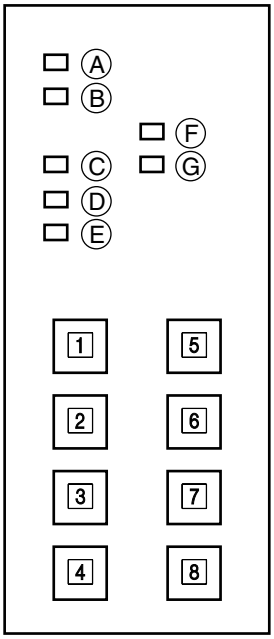

1) Set continuous paper (1P, 55kg., 15in.) on the rear tractor push and turn ON the power.
2) After pressing Switch [1] and turning OFF Lamp Ⓔ, press Switch [2] and feed the page.
3) Press Switch [1] and enter a printable mode. Lamp Ⓔ will go ON at this time.
4) Press Switch [4] to feed paper to the tear-off position, and confirm that the perforated line is within the regulated range.

If the perforated line is not within the regulated range, perform the following corrections.

5) Press Switch [4] and remove the paper.
6) Perform Step (4) again, continue pressing Switch [4] even after the adjustment of the paper cut position is completed, press Switches [2] and [3] while pressing switch [4], and correct the tear-off position.

- When pressing Switch [2] while pressing Switch [4], paper will be fed in the forward direction in a pitch of 1/60in.

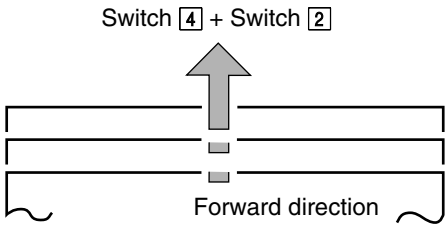

- When pressing Switch [3] while pressing Switch [4], paper will be fed in the reverse direction in a pitch of 1/60in.

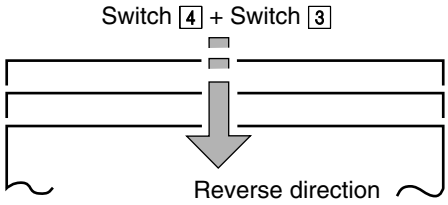

7) Release the switches when the leading edge of the paper matches the tear-off position. The paper position at the time the switches are release will be registered as the new tear-off position.

CAUTION!

- The adjustment range is from +200/60 to -40/60in. LCD display when the tear-off position is being corrected are shown below.

  1. LCD display when correction is enabled in the correction mode

T	E	A	R		O	F	F		P	O	S		A	D	J

  2. LCD display when the correction range is exceeded in the correction mode

T	E	A	R		O	F	F		P	O	S		A	D	J
R	A	N	G	E		O	V	E	R						

- This adjustment is memorized even when the power is turned OFF.

8.8 Adjusting the Horizontal Print Position

When the set values in the adjustment menu are changed in the following procedure, miss aligned horizontal print in bi-directional printing can be corrected. Furthermore, values can be set independently in a print mode of low speed, normal, high speed 1, and high speed 2.

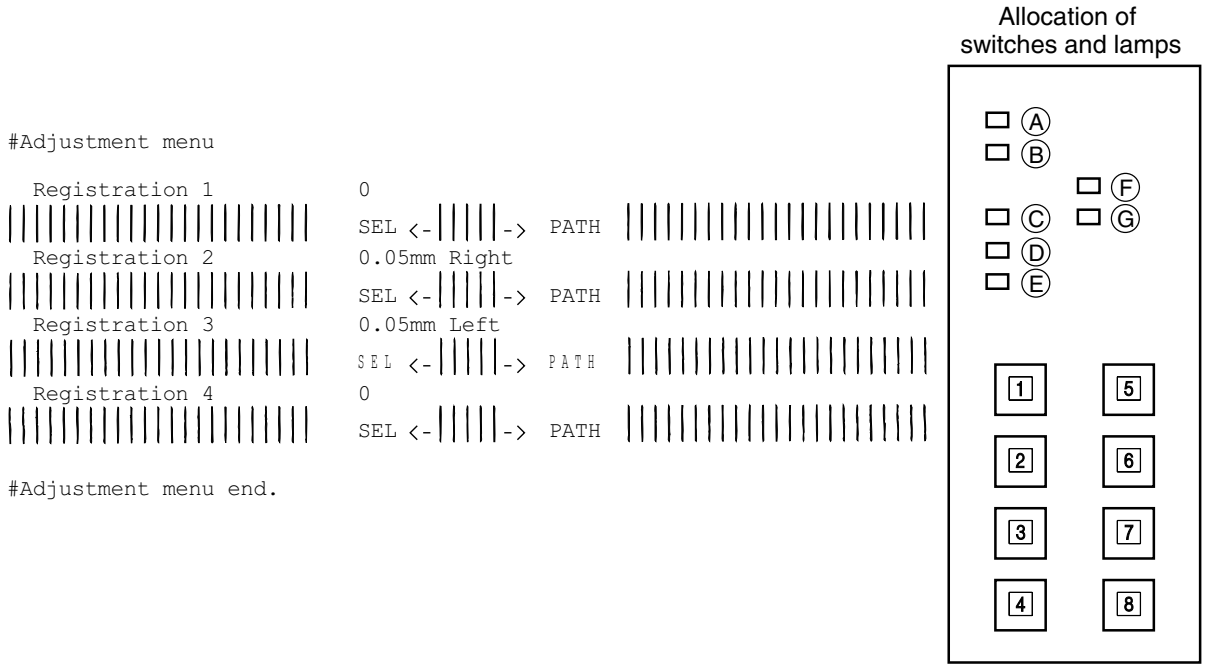

1) After setting continuous paper, turn ON the power while pressing Switches [1], [2], and [7] simultaneously, continue pressing the switches until [RELEASE SW] is displayed in the bottom row of the LCD.
2) The value currently set in the printer as the correction value for the horizontal print position will be printed out, so confirm that the position is not miss aligned. If the position is miss aligned, apply the following procedures.
3) Feed the paper by pressing Switches [2] and [3] and select the print mode to correct the misalignment. Vertical lines are printed by the continuous left and right movement of the carriage in each print mode, thus, miss aligned print in the horizontal direction in forward print and reverse print can be confirmed.
4) Reverse print moves 1/360in. to the left against forward print each time Switch [1] is pressed, and 1/360in. to the right each time Switch [5] is pressed (the switch to press will be printed), therefore, make adjustments so that the misalignment is cleared while checking the vertical lines being printed. Perform this adjustment to all print modes of low speed, normal, high speed 1, and high speed 2.
5) The final print setting will be registered when Switch [4] is pressed. “#Adjustment menu end” will be printed to complete the menu setting.

8.9 Adjusting the Line Feed Pitch for Cut-Sheets

The line feed pitch for cut-sheets (manual, CSF) can be corrected in the following procedures.

Confirmation time

- When the format does not match that of the pre-print or when the length of cut-sheets is not within regulation.

Correction method

1) Turn ON the power, enter the cut-sheet manual mode, then turn OFF the power.
2) Turn ON the power while pressing Switches [1], [2], and [7] simultaneously until “RELEASE SW” is displayed.
3) Feed a cut-sheet. “Sheet LF Revise” is displayed after horizontal print position correction is printed. Press Switch [1] or [5] and make adjustments referring to the amount of correction indicated in the table below.
4) By pressing Switch [4], “#Adjustment menu end” will be printed and the adjustment value will be registered.

Allocation of switches and lamps

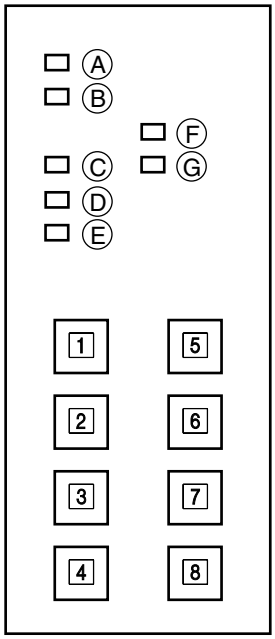

he contents of the cut-sheet LF pitch adjustment are indicated below.

Contents of Cut-sheet LF Pitch Adjustment

Value	Amount of Correction
0	Correction unnecessary (default)
±1	Correct ±1/360 per 813/360in.
±2	Correct ±1/360 per 409/360in.
±3	Correct ±1/360 per 273/360in.
±4	Correct ±1/360 per 205/360in.
±5	Correct ±1/360 per 164/360in.
±6	Correct ±1/360 per 136/360in.
±7	Correct ±1/360 per 117/360in.
±8	Correct ±1/360 per 102/360in.
±9	Correct ±1/360 per 91/360in.
±10	Correct ±1/360 per 82/360in.

If line feed does not match the format of the cut-sheet pre-print, set an appropriate value.

8.10 Adjusting the Skew Sensor

By setting the dip switch (DIP SW No. 4) on the control board to the maintenance side (ON) and performing the following procedures, skewed sensor positions (of front sensor, PE sensor, and paper width sensor) when detecting skewed cut-sheets can be corrected.

Confirmation time

- After replacing the front PE sensor or front sensor.
- After replacing the ribbon protector assembly (paper width sensor).

Allocation of switches and lamps

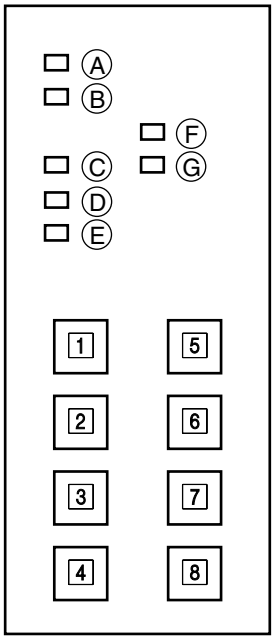

Correction method

1) Turn ON the power, enter the cut-sheet manual mode, then turn OFF the power.
2) Turn ON the power while pressing Switches [1], [2], and [3].

S	K	E	W		S	H	S	.		A	D	J	.		

3) Set a cut-sheet in the stage and press Switch [4].
4) The sensor distance will be displayed after the paper is fed and ejected to the stage.

S	A	V	E		X	X	X	>	S	E	L		S	W	
R	E	T	R	Y	>	P	A	P	E	R		S	E	T	

5) Repeat Steps (3) and (4) about three times.

Value XX is an index of the average value after repeating the procedure about three times, so repeat Steps (4) and (5) and press Switch [1] when this value is reached to memorize it in the printer.

CAUTION!

Set paper properly.

Perform this adjustment after performing “8.11.2 Slice level learning of the sensor”.

The correction value for skewed position will be registered by pressing Switch [1].

8.11 Adjusting the Sensors

8.11.1 Sensor check

By setting the dip switch (DIP SW No. 4) on the control board to the maintenance side (ON) and performing the following procedures, sensors can be checked if they are functioning properly. (Preset the dip switch before turning ON the power.)

Confirmation time

When problems arise in paper detection due to sensor abnormalities, or to check which sensor is not functioning properly.

Check method

1) Turn ON the power, enter the manual or CSF mode, then turn OFF the power.
2) Turn ON the power while pressing Switches [6], [7], and [8].
3) Set cut-sheets in the table or CSF, and feed the paper by pressing Switch [4]. If the paper is fed from the table, set A3 size cut-sheets horizontally. If the paper is fed from CSF, use B4 size horizontal 364mm cut-sheets.

Feed Slot	Cut-Sheets to Use
Table	A3 horizontal (or B4 horizontal)
CSF	B4 horizontal

4) Sensors that detected paper are displayed in the bottom row of the LCD in real-time as shown below, therefore, check if the sensors are functioning properly.

S	E	N	S	O	R		T	E	S	T					
F		R		C		T		S	K		P	R		P	L

Sensor that detected paper	LCD Display
Front PE sensor	F
Rear PE sensor	R
CSF paper sensor (only paper fed from CSF)	C
Table paper sensor	T
Front sensor	SK
Paper right width sensor	PR
Paper left width sensor	PL

5) A cut-sheet will be ejected by pressing Switch [4]. Furthermore, if the adjustment is not successful due to jams, etc. during paper feed or ejection, sensors that detected paper will be displayed in the bottom row of the LCD in real-time. The alarm that goes off when failing can be released by pressing Switch [1].

CAUTION!

- Excluding times for paper feed and ejection, do not detect cover or table open alarms, and concentrate on the printer operation.

8.11.2 Slice level learning function of sensors

By setting the dip switch (DIP SW No. 4) on the control board to the maintenance side (ON) and performing the following procedures, the detection level of various sensors are adjusted automatically and can be determined if it is normal or abnormal. (Preset the dip switch before turning ON the power.)

Objective

- To automatically memorize the slice level that matches the output (low level) of the no-paper status of each sensor after replacing each sensor.

Adjusting method

1) After removing all papers, turn ON the power while pressing Switches [2] and [3] simultaneously.
2) Confirm if each sensor is normal or abnormal by the buzzer.

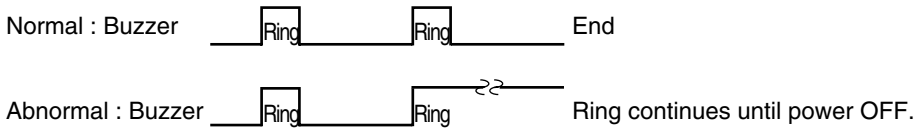

3) When abnormal, Lamp B will blink and the abnormal sensor can be determined in the LCD panel. Abnormalities indicate that a sensor output is at a high level. Therefore, perform maintenance such as cleaning or adjusting as there is a possibility of paper dust sticking onto a sensor. (See Chapters 4 and 8)

L	E	V	E	L		E	R	R	O	R					
F		R		C		T		S	K		P	R		P	L

❋ An abbreviation of the sensor that generated the error is displayed in the bottom row of the LCD. (The above example is when an error was generated from all sensors.)

Abbreviation	Error Sensor
F	Front PE
R	Rear PE
C	CSF
T	Table
SK	Skew
PR	Paper width right
PL	Paper width left

8.11.3 Confirming the voltage level of sensors

The voltage level of all sensors can be confirmed by the check terminal by the dip switch on the control board.

Table 8-1

Check Terminal	Sensor	Voltage Level	Location of Check Terminal
CH10	Front PE	Difference in voltage when detecting paper and not detecting paper is 2V or above.	Below plate blind
CH11	Rear PE		Below plate blind
CH13	CSF		Below plate blind
CH12	Table		Below plate blind
CH14	Skew		Below ROM cover
CH16	Paper width right		Below plate blind
CH15	Paper width left		Below plate blind
CH1	Ground terminal	————	Below plate blind
CH8	Ground terminal	————	Below ROM cover

Allocation of switches and lamps

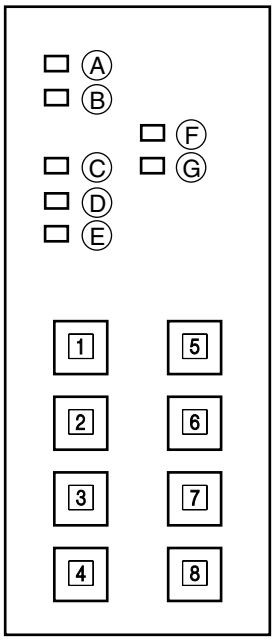

9. MAINTENANCE TEST

9.1 Selecting the Test Mode

9.1.1 Local mode start switch

Switches on the operator panel have functions listed in Table 9-1 so that various types of tests for can be conducted for maintenance. The mode for Table 9-1 is entered by pressing the switch marked with ● while turning ON the power.

Continue pressing the switch until [RELEASE SW] is displayed in the bottom row of the LCD.

Allocation of switches and lamps

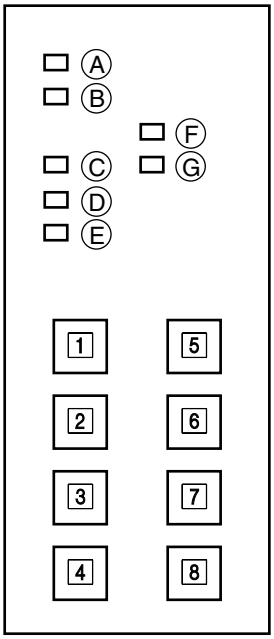

Table 9-1 Menu (1/3)

Test Item	Switch								Valid Condition		Remarks
	1	2	3	4	5	6	7	8	Paper Mode	DSW No.4	
Function Menu						●			_	_	Press switch in off-line mode.
Option I/F Menu					●	●	●				Starts up only when option I/F card is inserted.
Adjustment Menu	●	●					●		Continuous	_	Wide-width print; Menu default is also checked when DPS No.4 is ON.
									Cut-Sheet	_	Narrow-width print; Menu default is also checked when DPS No.4 is ON.
Special Menu					●		●	●	_	_	Hidden menu
Sets Menu setting to factory default	●							●	_	_	Function Menu
Sets Menu setting to factory default	●	●						●		_	Function Menu and Option I/F Menu
Menu Print	●				●				_	OFF	

Table 9-1 Menu (2/3)

Test Item	Switch								Valid Condition		Remarks
	1	2	3	4	5	6	7	8	Paper Mode	DSW No.4	
Rolling ASCII Self-test (6" width, 1 pattern)		●	●						_	OFF	_
Rolling ASCII Self-test (6" width, Continuation)		●	●	●					_	OFF	_
Rolling ASCII Self-test (13.6" width, Continuation)		●		●					Continuous	OFF	136 character fixed.
									Cut-sheet	OFF	60 character fixed.
Rolling ASCII Self-test (Post card size, Continuation)								●	Cut-sheet	OFF	_
Rolling ASCII Self-test (Business card size, Continuation)				●			●		Cut-sheet	OFF	_
Demo-pattern Self-test						●	●		Cut-sheet	OFF	
Auto lerning function for slice level of paper sensor		●	●						_	ON	Perform with no paper.
Manual setting for slice level of paper sensor		●	●					●	_	ON	
Sensor check mode						●	●	●	Cut-sheet	ON	_
Auto gap correction mode						●	●		Continuous	ON	Use 55kg, 1P paper
Auto gap test				●			●		_	ON	End after 100 times.
Gap close	●	●							_	ON	Close up to 1P position.
Gap open	●	●			●				_	ON	Open up to full-open position.
Auto gap adjustment aid mode	●			●			●		_	ON	
Head pin test		●				●			_	ON	_
Skew sensor adjustment mode	●	●	●						Cut-sheet	ON	
Sirial I/F test OKI HSP menu setting print	●	●			●				_	OFF	Start up serial circuit test when serial I/F card is inserted, and MUPIS setting list print when MUPIS I/F card is inserted.

Table 9-1 Hex Dump (3/3)

Test Item	Switch								Valid Condition		Remarks
	1	2	3	4	5	6	7	8	Paper Mode	DSW No.4	
HEX DUMP mode						●	●	●	_	OFF	_

9.1.2 Menu

This printer is installed with memory to memorize the control mode. When returning to default upon turning ON the power or by inputting reset signals, this printer refers to the memory and sets various modes automatically. At times when various commands are input from the host computer, the printer reacts according to the commands.

As for memory for the menu setting, the input contents are maintained even when the power of the printer is turned OFF. When the set items are modified, the set contents of the memory are modified by controlling the switches in the operator panel as shown below.

Function Menu, Option I/F Menu, Adjustment Menu, and Special Menu are contained in the menu setting which are started in the methods shown below.

Types of Menu	Startup Method
Function Menu	Press [6] 'Menu' in deselect mode.
Option I/F Menu	Turn ON the power while pressing [5] 'PATH' + [6] 'MENU' + [7] 'HIGH IMPACT COPY'.
Adjustment Menu	Turn ON the power while pressing [1] 'SEL' + [2] 'FF' + [7] 'HIGH IMPACT COPY'.
Special Menu	Turn ON the power while pressing [8] 'SHIFT' + [7] 'HIGH IMPACT COPY' + [5] 'PATH'.

9.1.2.1 Function setting menu

The menu moves to the Function menu by pressing the [MENU] switch in the Deselect mode after turning ON the power. The Function menu consists of the nine groups listed below, and Group [1] is entered when the Function menu is opened, and the group can be changed in the ascending or descending order by pressing the [MENU] or [HIGH IMPACT COPY] switch.

1) Font Group
2) Command Fnc. Group
3) Setup Group
4) Hardware Group
5) Manual Feed Group
6) CSF Group
7) Front Feed Group
8) Rear Feed Group
9) Double Feed Group

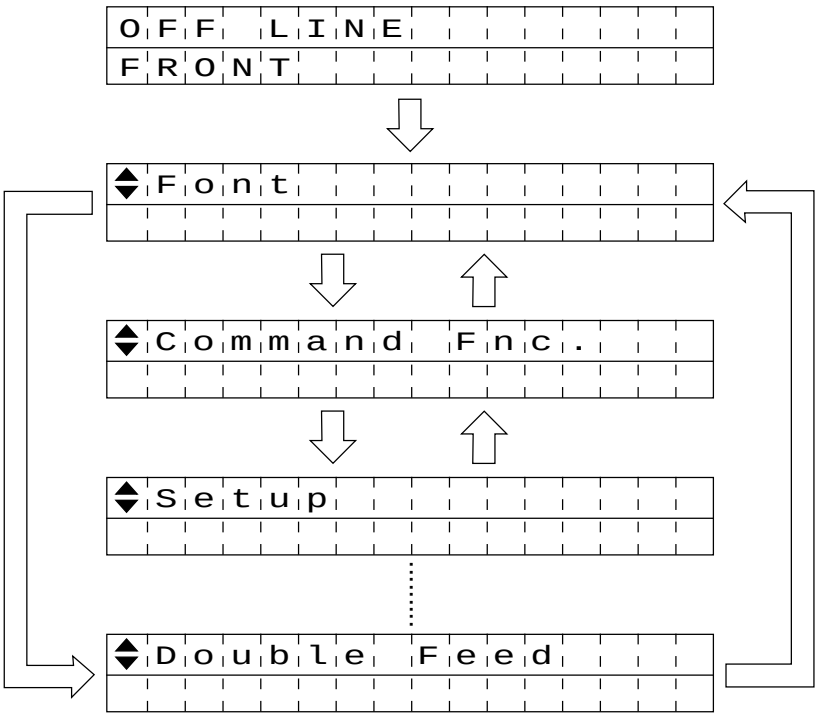

1) Font Group

Note : * mark means default

No.	Item	Sets	Function
1	⇕Print Mode	LQ Courier * LQ Roman LQ Swiss LQ Swiss Bold LQ Orator LQ Gothic LQ Prestage LQ OCR-A LQ OCR-B Utility	Sets the print mode.
2	⇕Pitch	10 CPI * 12 CPI 15 CPI 17.1 CPI 20 CPI	Sets the printing pitch.
3	⇕Prop. Spacing	No * Yes	Designates/releases the proportional mode.
4	⇕Style	Normal * Italics	Sets the font style.
5	⇕Size	Single * Double	Sets the vertical and horizontal scale. Double: sets the vertical and horizontal scale 2 times.
6	⇕Character Set	Set I * Set II	Sets the character sets. Set I : Italics table (ESC t 0 + ESC 7) Set II : Graphics table (ESC t 1 + ESC 6)
7	⇕Language Set	ASCII * French German British Danish I Swedish Italian Spanish I Japanese Norwegian Danish II Spanish II Latin American French Canadian Dutch Swedish II Swedish III Swedish IV Turkish Swiss I Swiss II Publisher	Selects international character set.
8	⇕Zero Character	Slashed * Unslashed	Switches attachment/removal of slash for zero (30H) font.

Note : * mark means default

No.	Item	Sets	Function
9	⇕Code Page (1)	USA * Canada French Multilingual Portugal Norway Turkey Greek_437 Greek_869 Greek_928 Grk_437 CYPRUS Polska Mazovia Serbo CroaticI Serbo CroaticII ECMA-94 Hungarian CWI Windows Greek Windows CEE WindowsCyrillic CEE L II-852 CyrillicI-852 CyrillicII-866 Kamecicky (MJK) ISO Latin 2 Hebrew NC (862) Hebrew OC Turkey_857 Win Tky Latin 5 Windows Hebrew Ukrainian Bulgarian Latin 6 8859/10 Window Baltic Baltic_774 KBL-Lithuanian Cyrillic Latvia Roman-8 Icelandic-861 Multilingual858 ISO 8859-15 Greek_737	Set the code page character set.

(1) It depends for the value of Sets on CG. (Rev01.03)

2) Command Fnc. Group

Note : * mark means default

No.	Item	Sets	Function
1	⇕Auto LF	No * Yes	The received CR command determines if LF is executed or not. **No :** No execute LF **Yes :** Execute LF
2	⇕Print Suppress	No Yes *	Switches enable/disable of print suppress setting command. **Yes :** Designates print suppress setting command enabled.
3	⇕FF Function	Eject * Form Feed	The function of FF command in MANUAL mode is chosen.
4	⇕Eject Condition	Bottom Detect * FF Code	Selects eject conditions at cut sheet mode. **Bottom Detect :** If the lower end of a paper is detected, it will eject automatically. A eject position is set up with a menu. (Auto Eject Pos.) **FF Code :** It does not eject until it receives FF or eject command.

3) Setup Group

Note : * mark means default

No.	Item	Sets	Function
1	⇕Multi Pass	Bi-directional * Uni-directional	Selects the print direction in case multiplex path print data, such as vertical double extension, exists in a line.
2	⇕Graphics	Bi-directional * Uni-directional	Selects the print direction in case image data exists in a line.
3	⇕High Skip	Valid * Invalid	Selects enable/disable of High Skip.
4	⇕Impact Mode	Normal * Hi-impact Copy Quiet	Selects impact mode.

4) Hardware Group

Note : * mark means default

No.	Item	Sets	Function
1	⇕Rcv. Buffer (2)	64KB * 1 Line	Selects use/not use of Rcv. Buffer.
2	⇕Path Change	Not Tear Off * Tear Off	Selects the function of path change. When "Tear Off" is chosen, tear off is first performed in path change operation from continuous form.
3	⇕Cut Sheet Smooth	Invalid * Valid	Selects enable/disable of cut sheet smooth.
4	⇕Fan-Folded LF	Fast Speed * Slow Speed	Selects the line feed speed in the case of using thick paper.
5	⇕Skp Ovr Binding	Invalid * Valid	Selects enable/disable of skip over binding function.
6	⇕Parallel I/F (2)	Uni-directional Bi-directional *	Sets Bi-Direction enabled/disabled.
7	⇕Auto Feed XT (2)	Invalid * Valid	Changes centro I/F Auto Feed XT signals to be valid/invalid.
8	⇕Host Interface (1)	Parallel * Opt. Card Auto Interface	Designates the use of interface. **Parallel :** Switches the interface to be Parallel only. **Opt. Card :** Switches the interface to be Option Card only. **Auto Interface :** Automatically switches I/F depending on the received data. When the data sending is stopped for the set time of I/F Time Out, releases all I/F and switches I/F to be idle status.
9	⇕I/F Time Out (1)	15 sec * 30 sec 45 sec 1 min 2 min 3 min 4 min 5 min	Sets the interface time out. When the data receiving has been stopped for over the time listed in the left boxes, releases All I/Fs and switches them to be idle status.
10	⇕I/F Timing Adj	STANDARD * ACK-AFTER-BUSY STD-RISING ACK/BSY-RISING BSY-AFTER-STB CENTRONICS-OLD	Sets the timing of centro I/F signals. Refer to the following page for details.
11	⇕Buzzer	Disable * Enable	Switches enable/disable of buzzer when alarm is generated. When fatal alarm is generated, even if a menu setup is set as disable, a buzzer sounds.

Note : * mark means default

No.	Item	Sets	Function
12	⇕Power Saving	Disable Enable *	Switches enable/disable of power saving function.
13	⇕Pow Save Delay	3min 5min 10min *	Selects the time until it goes into the power save mode.

(1) It displays, only when option I/F card is mounted.
(2) A setup to standard centro I/F.

I/F Timing Adj

Sets	Timing
STANDARD	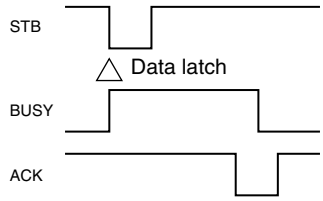
ACK-AFTER-BUSY	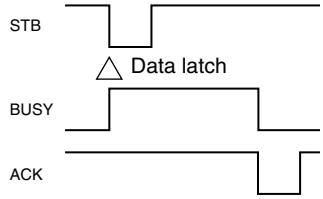
STD-RISING	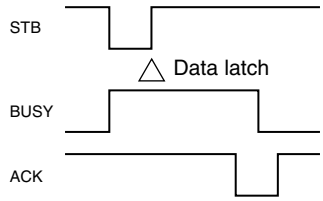
ACK/BSY-RISING	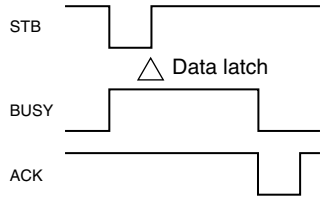
BSY-AFTER-STB	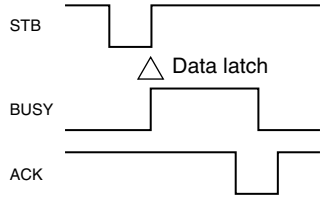
CENTRONICS-OLD	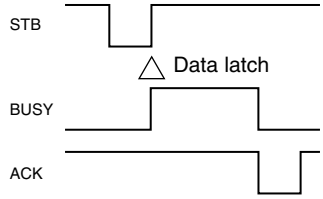

5) Manual Feed Group

Note : * mark means default

No.	Item	Sets	Function
1	⇕TOF	0.42mm 4.65mm * 5.92mm 8.47mm 8.88mm 21.58mm 23.7mm 25.82mm 1Chr. Set Pos.	Selects the load position of MANUAL mode. It is the distance from the tip of a paper to the 1st pin. This setup is followed when paper is inserted also to CSF mode from a table.
2	⇕Line Spacing	6LPI * 8LPI	Sets the line pitch.
3	⇕Page Length	11" 11 2/3" 12" * 14" 16.57" 17" 3" 3.5" 4" 5" 5.5" 6" 7" 8" 8.5"	Sets the page length.
4	⇕Page Width	8" 10.6" 13.2" 13.6" *	Sets the right margin.
5	⇕Wait Time	2.0 sec * 1.0 sec 0.5 sec	Sets the time until it starts inserting.
6	⇕Load LF Speed	Fast Speed * Slow Speed	Selects the feed speed in the table paper loading.
7	⇕Skew Detect	Invalid Valid *	Switches enable/disable of skew detects.
8	⇕Auto Eject Pos.	3.18mm(1/8") 6.35mm(1/4") *	Selects the auto eject position. Setting value is the distance from the bottom end of a paper to the center of a head.
9	⇕Eject Dir.	Front * Rear	Selects the eject direction.

Note : * mark means default

No.	Item	Sets	Function
10	⇕Bottom Adjust	-10 (-2.82mm) - 9 (-2.54mm) - 8 (-2.26mm) - 7 (-1.97mm) - 6 (-1.69mm) - 5 (-1.41mm) - 4 (-1.13mm) - 3 (-0.85mm) - 2 (-0.56mm) - 1 (-0.28mm) 0 (0 mm) * + 1 (+0.28mm) + 2 (+0.56mm) + 3 (+0.85mm) + 4 (+1.13mm) + 5 (+1.41mm) + 6 (+1.69mm) + 7 (+1.97mm) + 8 (+2.26mm) + 9 (+2.54mm) +10 (+2.82mm)	Selects the adjustment value of "Auto Eject Pos.".
11	⇕Paper End	On-line * Off-line	Selects the I/F state after paper eject. **On-line :** On-line state is continued. PE signal is not outputted, even if it pushes SEL switch and it changes into Off-line state. **Off-line :** It will be in Off-line state and PE signal is outputted.
12	⇕Gap Control	Auto * Manual Gap 1 Manual Gap 2 Manual Gap 3 Manual Gap 4 Manual Gap 5 Manual Gap 6 Manual Gap 7 Manual Gap 8 Manual Gap A Manual Gap B Manual Gap C Manual Gap D Manual Gap E	Selects Gap Control. **Auto :** Auto gap motion is performed to printing timing. **Manual Gap n :** Auto gap motion is performed to loading timing.
13	⇕Gap Pos.	45mm (1.8") * 101.6mm (4")	Selects the horizontal position which performs auto gap or manual gap motion.

Note : * mark means default

No.	Item	Sets	Function
14	⇕1st Dot Adj.	1.96mm Right 1.68mm Right 1.40mm Right 1.12mm Right 0.84mm Right 0.56mm Right 0.28mm Right 0 * 0.28mm Left 0.56mm Left 0.84mm Left 1.12mm Left 1.40mm Left 1.68mm Left 1.96mm Left	Selects the adjustment value of horizontal first dot position.

6) CSF Group

Note : * mark means default

No.	Item	Sets	Function
1	⇕TOF	0.42mm 4.65mm * 5.92mm 8.47mm 8.88mm 21.58mm 23.7mm 25.82mm 1Chr. Set Pos.	Selects the load position of CSF mode. It is the distance from the tip of a paper to the 1st pin.
2	⇕Line Spacing	6LPI * 8LPI	Sets the line pitch.
3	⇕Page Length	11" 11 2/3" 12" * 14" 16.57" 17" 3" 3.5" 4" 5" 5.5" 6" 7" 8" 8.5"	Sets the page length.
4	⇕Page Width	8" 10.6" 13.2" 13.6" *	Sets the right margin.

Note : * mark means default

No.	Item	Sets	Function
5	⇕Skew Detect	Invalid * Valid	Switches enable/disable of skew detects.
6	⇕Auto Eject Pos.	3.18mm(1/8") 6.35mm(1/4") *	Selects the auto eject position. Setting value is the distance from the bottom end of a paper to the center of a head.
7	⇕Eject Dir.	Front Rear *	Selects the eject direction.
8	⇕Bottom Adjust	-10 (-2.82mm) - 9 (-2.54mm) - 8 (-2.26mm) - 7 (-1.97mm) - 6 (-1.69mm) - 5 (-1.41mm) - 4 (-1.13mm) - 3 (-0.85mm) - 2 (-0.56mm) - 1 (-0.28mm) 0 (0 mm) * + 1 (+0.28mm) + 2 (+0.56mm) + 3 (+0.85mm) + 4 (+1.13mm) + 5 (+1.41mm) + 6 (+1.69mm) + 7 (+1.97mm) + 8 (+2.26mm) + 9 (+2.54mm) +10 (+2.82mm)	Selects the adjustment value of "Auto Eject Pos.".
9	⇕Auto Gap Timing	Every Paper 1st. Paper *	Selects the Auto Gap timing. **Every Paper :** Auto gap motion is performed to every paper. **1st. Paper :** Auto gap motion is performed only in the first paper which changed into the On-line state.
10	⇕Gap Control	Auto * Manual Gap 1 Manual Gap 2 Manual Gap 3 Manual Gap 4 Manual Gap 5 Manual Gap 6 Manual Gap 7 Manual Gap 8 Manual Gap A Manual Gap B Manual Gap C Manual Gap D Manual Gap E	Selects Gap Control. **Auto :** Auto gap motion is performed to printing timing. **Manual Gap n :** Auto gap motion is performed to loading timing.
11	⇕Gap Pos.	45mm (1.8") * 101.6mm (4")	Selects the horizontal potition which performs auto gap or manual gap motion.

Note : * mark means default

No.	Item	Sets	Function
12	⇕1st Dot Adj.	1.96mm Right 1.68mm Right 1.40mm Right 1.12mm Right 0.84mm Right 0.56mm Right 0.28mm Right 0 * 0.28mm Left 0.56mm Left 0.84mm Left 1.12mm Left 1.40mm Left 1.68mm Left 1.96mm Left	Selects the adjustment value of horizontal first dot position.

7) Front Feed Group

Note : * mark means default

No.	Item	Sets	Function
1	⇕TOF	0.42mm 4.65mm * 8.47mm 8.88mm 17.35mm 21.58mm 23.7mm 25.82mm 1Chr. Set Pos.	Selects the load position of Front mode. It is the distance from the tip of a paper to the 1st pin.
2	⇕Line Spacing	6LPI * 8LPI	Sets the line pitch.
3	⇕Page Length	11" 11 2/3" 12" * 14" 16.57" 17" 3" 3.5" 4" 5" 5.5" 6" 7" 8" 8.5"	Sets the page length.
4	⇕Skip Over Perf.	No * Yes	Designates/releases 1-inch skip over perforated line. **No :** Releases 1-inch skip over perforated line **Yes :** Designates 1-inch skip over perforated line

Note : * mark means default

No.	Item	Sets	Function
5	⇕Page Width	8" 10.6" 13.2" 13.6" *	Sets the right margin.
6	⇕Tear Off Pos.	Position 1 * Position 2	Selects the position of Tear Off motion. **Position 1 :** Rear cover cutter **Position 2 :** Stacker
7	⇕Form Tear Off	Off * 2 sec	Designates/releases Form Tear Off mode and sets the delay time.
8	⇕Initial Pos.	Print * Tear Off	Selection of whether the paper position at the time of initializing is carried out to a printing position, or to make it a Tear Off position. **Print :** A paper is a printing position at the time of an initialization end. **Tear Off :** A paper is a Tear Off position at the time of an initialization end.
9	⇕PE Pos.	3.18mm(1/8") 6.35mm(1/4") *	Selects the PE position. Setting value is the distance from the bottom end of a paper to the center of a head.
10	⇕PE Pos. Adjust	-10 (-2.82mm) - 9 (-2.54mm) - 8 (-2.26mm) - 7 (-1.97mm) - 6 (-1.69mm) - 5 (-1.41mm) - 4 (-1.13mm) - 3 (-0.85mm) - 2 (-0.56mm) - 1 (-0.28mm) 0 (0 mm) * + 1 (+0.28mm) + 2 (+0.56mm) + 3 (+0.85mm) + 4 (+1.13mm) + 5 (+1.41mm) + 6 (+1.69mm) + 7 (+1.97mm) + 8 (+2.26mm) + 9 (+2.54mm) +10 (+2.82mm)	Selects the adjustment value of "PE Pos.".

Note : * mark means default

No.	Item	Sets	Function
11	⇕Gap Control	Auto * Manual Gap 1 Manual Gap 2 Manual Gap 3 Manual Gap 4 Manual Gap 5 Manual Gap 6 Manual Gap 7 Manual Gap 8 Manual Gap A Manual Gap B Manual Gap C Manual Gap D Manual Gap E	Selects Gap Control. **Auto :** Auto gap motion is performed to printing timing. **Manual Gap n :** Auto gap motion is performed to loading timing.
12	⇕Gap Pos.	45mm (1.8") * 101.6mm (4")	Selects the horizontal potition which performs auto gap or manual gap motion.
13	⇕1st Dot Adj.	1.96mm Right 1.68mm Right 1.40mm Right 1.12mm Right 0.84mm Right 0.56mm Right 0.28mm Right 0 * 0.28mm Left 0.56mm Left 0.84mm Left 1.12mm Left 1.40mm Left 1.68mm Left 1.96mm Left	Selects the adjustment value of horizontal first dot position.

8) Rear Feed Group

Note : * mark means default

No.	Item	Sets	Function
1	⇕TOF	0.42mm 4.65mm * 8.47mm 8.88mm 17.35mm 21.58mm 23.7mm 25.82mm 1Chr. Set Pos.	Selects the load position of REAR mode. It is the distance from the tip of a paper to the 1st pin.
2	⇕Line Spacing	6LPI * 8LPI	Sets the line pitch.
3	⇕Page Length	11" 11 2/3" 12" * 14" 16.57" 17" 3" 3.5" 4" 5" 5.5" 6" 7" 8" 8.5"	Sets the page length.
4	⇕Skip Over Perf.	No * Yes	Designates/releases 1-inch skip over perforated line. **No :** Releases 1-inch skip over perforated line **Yes :** Designates 1-inch skip over perforated line
5	⇕Page Width	8" 10.6" 13.2" 13.6" *	Sets the right margin.
6	⇕Form Tear Off	Off * 2 sec	Designates/releases Form Tear Off mode and sets the delay time.
7	⇕Initial Pos.	Print * Tear Off	Selection of whether the paper position at the time of initializing is carried out to a printing position, or to make it a Tear Off position. **Print :** A paper is a printing position at the time of an initialization end. **Tear Off :** A paper is a Tear Off position at the time of an initialization end.
8	⇕PE Pos.	3.18mm(1/8") 6.35mm(1/4") *	Selects the PE position. Setting value is the distance from the bottom end of a paper to the center of a head.

Note : * mark means default

No.	Item	Sets	Function
9	⇕PE Pos. Adjust	-10 (-2.82mm) - 9 (-2.54mm) - 8 (-2.26mm) - 7 (-1.97mm) - 6 (-1.69mm) - 5 (-1.41mm) - 4 (-1.13mm) - 3 (-0.85mm) - 2 (-0.56mm) - 1 (-0.28mm) 0 (0 mm) * + 1 (+0.28mm) + 2 (+0.56mm) + 3 (+0.85mm) + 4 (+1.13mm) + 5 (+1.41mm) + 6 (+1.69mm) + 7 (+1.97mm) + 8 (+2.26mm) + 9 (+2.54mm) +10 (+2.82mm)	Selects the adjustment value of "PE Pos.".
10	⇕Gap Control	Auto * Manual Gap 1 Manual Gap 2 Manual Gap 3 Manual Gap 4 Manual Gap 5 Manual Gap 6 Manual Gap 7 Manual Gap 8 Manual Gap A Manual Gap B Manual Gap C Manual Gap D Manual Gap E	Selects Gap Control. **Auto :** Auto gap motion is performed to printing timing. **Manual Gap n :** Auto gap motion is performed to loading timing.
11	⇕Gap Pos.	45mm (1.8") * 101.6mm (4")	Selects the horizontal potition which performs auto gap or manual gap motion.
12	⇕1st Dot Adj.	1.96mm Right 1.68mm Right 1.40mm Right 1.12mm Right 0.84mm Right 0.56mm Right 0.28mm Right 0 * 0.28mm Left 0.56mm Left 0.84mm Left 1.12mm Left 1.40mm Left 1.68mm Left 1.96mm Left	Selects the adjustment value of horizontal first dot position.

9) Double Feed Group

Note : * mark means default

No.	Item	Sets	Function
1	⇕Line Spacing	6LPI * 8LPI	Sets the line pitch.
2	⇕Page Length	11" 11 2/3" 12" * 14" 16.57" 17" 3" 3.5" 4" 5" 5.5" 6" 7" 8" 8.5"	Sets the page length.
3	⇕Skip Over Perf.	No * Yes	Designates/releases 1-inch skip over perforated line. **No :** Releases 1-inch skip over perforated line **Yes :** Designates 1-inch skip over perforated line
4	⇕Page Width	8" 10.6" 13.2" 13.6" *	Sets the right margin.
5	⇕PE Pos.	3.18mm(1/8") 6.35mm(1/4") *	Selects the PE position. Setting value is the distance from the bottom end of a paper to the center of a head.
6	⇕PE Pos. Adjust	-10 (-2.82mm) - 9 (-2.54mm) - 8 (-2.26mm) - 7 (-1.97mm) - 6 (-1.69mm) - 5 (-1.41mm) - 4 (-1.13mm) - 3 (-0.85mm) - 2 (-0.56mm) - 1 (-0.28mm) 0 (0 mm) * + 1 (+0.28mm) + 2 (+0.56mm) + 3 (+0.85mm) + 4 (+1.13mm) + 5 (+1.41mm) + 6 (+1.69mm) + 7 (+1.97mm) + 8 (+2.26mm) + 9 (+2.54mm) +10 (+2.82mm)	Selects the adjustment value of "PE Pos.".

Note : * mark means default

No.	Item	Sets	Function
7	⇕Gap Control	Auto * Manual Gap 1 Manual Gap 2 Manual Gap 3 Manual Gap 4 Manual Gap 5 Manual Gap 6 Manual Gap 7 Manual Gap 8 Manual Gap A Manual Gap B Manual Gap C Manual Gap D Manual Gap E	Selects Gap Control. **Auto :** Auto gap motion is performed to printing timing. **Manual Gap n :** Auto gap motion is performed to loading timing.
8	⇕Gap Pos.	45mm (1.8") * 101.6mm (4")	Selects the horizontal potition which performs auto gap or manual gap motion.
9	⇕1st Dot Adj.	1.96mm Right 1.68mm Right 1.40mm Right 1.12mm Right 0.84mm Right 0.56mm Right 0.28mm Right 0 * 0.28mm Left 0.56mm Left 0.84mm Left 1.12mm Left 1.40mm Left 1.68mm Left 1.96mm Left	Selects the adjustment value of horizontal first dot position.

9.1.3 Switch function

The table below indicates the functions of switches in the operation panel for menu setting.

Switch	Function
MENU	Advances a group by one. Returns to the 1st group after the last group.
HIGH IMPACT COPY	Returns a group by one. Advances to the last group after the 1st group.
SEL	Advances a set value by one. Returns to the 1st value after the last value.
PATH	Returns a set value by one. Advances to the last value after the 1st value.
FF	Advances an item by one. Returns to the 1st item after the last item.
LF	Returns an item by one. Advances to the last item after the 1st item.
LOAD	Ends menu.

Change the menu setting in the following procedures.

[Function setting menu]

1) Press the [MENU] switch during off-line.
2) The following message is indicated in the panel.

```
Font
```

3) [Menu] items are changed and displayed in the ascending order each time the [MENU] switch is pressed.
4) When menu mode is displayed, the 1st item of the group will appear by pressing the [FF] or [LF] switch.
5) The set item will change in the ascending order each time the [FF] switch is pressed.
   The item name is displayed in the top row, and the set value is displayed in the bottom row of the LCD.

Example:

```
Print Mode
LQ Courier
```

Press [FF] switch

```
Pitch
10 CPI
```

Press [FF] switch

```
Prop Spacing
No
```

Press the [FF] switch until the desired item appears.
The set items will change in the descending order by pressing [LF] instead of the [FF] switch.

6) Press the [SEL] switch when the desired item appears. The display of the set item will change each time the switch is pressed.

Example:

```
Print Mode
LQ Courier
```

Press [FF] switch

```
Print Mode
LQ Roman
```

Press the [SEL] switch until the desired item appears.

The set value will change in the descending order by pressing [PATH] instead of the [SEL] switch.

7) If there are other items to change, perform the same setting by pressing the [FF] or [LF] switch.
8) To end the change of setting for the menu, press the [LOAD] switch. The following message is displayed for approx. two seconds when the switch is pressed, then the printer will shift to on-line.

```
Menu End
```

The last value displayed is memorized by the printer for each item.

[Menu for adjustment value]

1) Turn OFF the printer.
2) Set paper and cartridge ribbon so that the printer is ready to print.
3) Turn the power ON while pressing the [SEL], [FF], and [HIGH IMPACT COPY], and keep pressing until [RELEASE SW] appears in the bottom row of the LCD.
4) The set item will change in the ascending order each time the [FF] switch is pressed, and will be printed in the current set value.
5) When the item desired to be changed is printed, press the [SEL] or [PATH] switch to adjust the print result. The set value will appear each time the switch is pressed and the item will be printed in that value.
6) If there are other items to change, perform the same setting by pressing the [FF] or LF] switch.
7) To end the change of setting for the menu, press the [LOAD] switch. [Menu End] will appear for approx. two seconds when the switch is pressed, then the printer will shift to on-line.

The last value displayed is memorized by the printer for each item.

CAUTION!

- Functions of the operator panel switches will differ from the usual functions when changing the menu setting.
- The [SEL] lamp will blink when changing the menu setting.
- When the power switch is turned OFF before pressing the [LOAD] switch, the set values will not be changed.
- When paper-end occurs while changing the settings in the adjustment menu, the procedure can be continued by setting additional paper.

❋ Adjustment value items

Default is “0” Appropriate values are set at the time of delivery.

No.	Item	Sets	Function
1	⇕Registration 1	-5 ~ -1 0 +1 ~ +5	Corrects the print start position upon reverse print. Moves position 1/360" in either direction according to the switch.
2	⇕Registration 2		
3	⇕Registration 3		
4	⇕Registration 4		
5	⇕Sheet LF Revise	-10 ~ -1 0 +1 ~ +10	Corrects the amount of line feed after feeding cut-sheets. (Note)

Note:

The LF pitch for cut-sheets is adjusted as shown below.

Sets	Function
0	non adjustment
±1	adjustment of ±1/360 inches is performed every 813/360 inches.
±2	adjustment of ±1/360 inches is performed every 409/360 inches.
±3	adjustment of ±1/360 inches is performed every 273/360 inches.
±4	adjustment of ±1/360 inches is performed every 205/360 inches.
±5	adjustment of ±1/360 inches is performed every 164/360 inches.
±6	adjustment of ±1/360 inches is performed every 136/360 inches.
±7	adjustment of ±1/360 inches is performed every 117/360 inches.
±8	adjustment of ±1/360 inches is performed every 102/360 inches.
±9	adjustment of ±1/360 inches is performed every 91/360 inches.
±10	adjustment of ±1/360 inches is performed every 82/360 inches.

Set an appropriate adjustment value when the preprint format of a cut-sheet does not match the line feed.

9.1.4 Menu setting print list

Set values of the function set menu and adjustment menu are printed along with the set items by turning ON the power while pressing the 1 and 5 switches and continue pressing the switches until [RELEASE SW] appears in the bottom row of the LCD. The following message appears in the panel during the print job.

```
MENU PRINT
```

1) Print each set item and set value by ANK.
2) After all items are printed, the printer will initialize automatically and return to on-line.
3) If paper runs out during the print job, supply paper and continue by performing list print.

[Operation procedures]

1) Set paper and cartridge ribbon so that the printer is ready to print.
2) 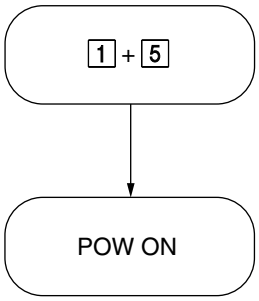

Turn ON the power while pressing 1 + 5.

Allocation of switches and lamps

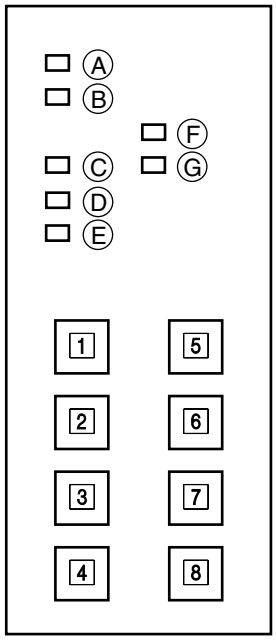

9.1.5 Default setting of function setting

Turn ON the power while pressing the 1 and 8 switches, and set the contents in the function set menu to default values.

9.1.6 Default setting of all menus

Turn ON the power while pressing the 1, 2, and 8 switches, and set all menus including the adjustment value to default values.

(Only the function set menu and adjustment value menu will be set to default.)

10. TROUBLESHOOTING PROCEDURES

1) Before troubleshooting

When a request for troubleshooting is received from a customer, confirm whether the problem could be recovered by referring to “Solving Problems” in the Instruction Manual in advance.

Try to find out how the problem occurred and write it down. Before searching for the reason, operate the printer in the same situation as when the problem occurred and see if the same problem is generated. If reproduction of the problem cannot be performed, conduct a test print before attempting a search for the cause.

2) Procedures in searching for the cause

There are two methods in searching for the cause of the problem.

a) If an abnormal phenomenon is confirmed in advance, proceed to the applicable repair procedure in accordance with Table 10-1.

b) If an abnormal phenomenon cannot be confirmed, specify the abnormal phenomenon from “10.1 Procedures for Analyzing Problems” and proceed to the applicable repair procedure. If the phenomenon cannot be specified, conduct an investigation of a similar phenomenon.

Upon searching for the cause, the printer may have to be operated with the upper cover open. In such a case, disable the cover open alarm detection function from the adjustment value set menu in advance or disconnect connector CN8 on the UHPC print circuit board. When operating the printer with the upper cover open, be extremely careful of unexpected movements of the carriage or rising temperature of the print head.

10.1 Procedures for Analyzing Problems

Allocation of switches and lamps

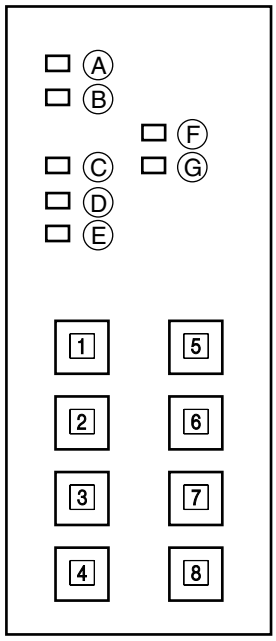

Start
↓
Turn OFF the power switch.
Remove the interface cable.
Remove paper.
↓
Move the carriage to the left and right by hand.
↓
Does the carriage move smoothly?
- N: Does it move smoothly when the ribbon cartridge is removed?
  - N: Refer to “10.2.6 Carriage movement abnormalities”.
  - Y: Refer to “10.2.7 Ink ribbon feed abnormalities”.
- Y: Is the ink ribbon feed normal?
  - N: Refer to “10.2.7 Ink ribbon feed abnormalities”.
  - Y: Does power lamp Ⓐ go ON when the power is turned ON?
    - N: Do other lamps go ON?
      - N: Refer to “10.2.1 Power-related abnormalities”.
      - Y: Refer to “10.2.4 Operation board abnormalities”.
    - Y: Does it not move while other lamps are lit?
      - Y: Refer to “10.2.2 Reset circuit abnormalities”.
      - N: Is the alarm displayed?
        - Y: Refer to “10.2.3 Alarm display”.
        - N: Go to (1).

(1)
↓
Set paper and press SW [4].
↓
Is paper absorbed?
- N: Refer to “10.2.4 Operation board abnormalities” or “10.2.5 Paper feed abnormalities”.
- Y: Press SW [1] several times.
  ↓
  Does Lamp Ⓔ go ON and OFF alternately every time the switch is pressed?
  - N: Refer to “10.2.4 Operation board abnormalities”.
  - Y: Press SW [1] and turn OFF Lamp Ⓔ.
    ↓
    Press SW [3].
    ↓
    To the next page

From the previous page

↓

Is line feed performed?

- N: Refer to “10.2.4 Operation board abnormalities” or “10.2.5 Paper feed abnormalities”.
- Y: Press SW [2].

  ↓

  Is paper ejected?

  - N: Refer to “10.2.4 Operation board abnormalities” or “10.2.5 Paper feed abnormalities”.
  - Y: Turn OFF the power and set continuous paper.

    ↓

    Turn ON the power while pressing SW [2] and [3], and perform test print.

    ↓

    Does test print begin?

    - N: Does the carriage move?
      - N: Refer to “10.2.6 Carriage movement abnormalities”.
      - Y: Refer to “10.2.8 Print head movement abnormalities”.
    - Y: Is an error generated?
      - Y: Refer to “10.2.3 Alarm display”.
      - N: Is print quality normal?
        - N: Analyze the faulty portion from the print result.
        - Y: Investigate a similar case from Table 10-1.

10.2 Procedures for Repairing

The following table shows examples of typical problems. If there are no problems that match your case, find and investigate a similar case.

Table 10-1

Section to Refer	Item	Specific Contents of Problems	Remarks
10.2.1	Abnormal electrical systems	• No reaction at power ON. (no lamp will go ON) • Power lamp goes ON at power ON but goes OFF immediately. (power failure) • Power fails during print operation.	
10.2.2	Abnormal reset circuit	• No reaction with power ON. (lamp status does not change at power ON)	
10.2.3	Alarm display	• Operation board lamps (Ⓒ [green], Ⓑ [red]) display alarm.	
10.2.4	Faulty operation board	• Some lamps do not go ON (although carriage moves). • Some lamps stay ON (excluding power lamp). • Some SW do not function, or some keep functioning. • Mode changes to one other than normal mode arbitrarily after extracting datum.	
10.2.5	Abnormal paper feed Feed jam (front/rear)	• Paper-end is detected even when paper is set. (Lamp Ⓑ goes ON) • Paper-end is not detected even when there is no paper. (Lamp Ⓑ does not go ON) • Paper is not fed, or space between lines is abnormal. • LF motor hums abnormally. • Paper jam occurs repeatedly. • Paper is torn. • Skews are generated.	
10.2.6	Abnormal carriage movement	• Space between characters is abnormal, characters overlap, or print position is skewed. • ERROR HOMING • ERROR SPACING	
10.2.7	Abnormal ink ribbon feed	• Ink ribbon is nor fed normally or not fed at all. • Ink ribbon jams occur. • Print result is faint, dirty, or density is inconsistent.	
10.2.8	Abnormal print head movement	• Dots are omitted, or unnecessary dots are printed. • Print results are skewed. • Nothing is printed. (although carriage moves)	
10.2.9	Abnormal interface	• Lamp Ⓔ is ON but does not print. (no reaction) • Print is not performed after Lamp Ⓔ goes ON. • Error or false contents are printed.	
10.2.10	Abnormal auto paper weight adjusting movement	• ERROR GAP	

Allocation of switches and lamps

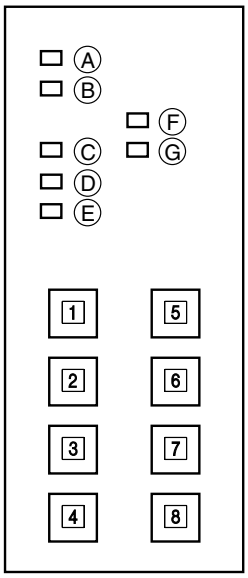

10.2.1 Power-related abnormalities

- No reaction with power ON.
  (no lamp will go ON)

└ Is the continuity of the AC cord normal?
- ├ N: Replace the AC cord.
- └ Y: Is the AC fuse of the power source burnt?
  - ├ Y: Replace the power source assembly (do not replace the fuse).
  - └ N: Are the following voltages output to connectors DCOUT1, DCOUT2 in the power source?

Connector	Pin No.	Permissible Range
DCOUT1	1~6	+56.7~+63V
	7~12	0V (Drive system)
DCOUT2	1~3	0V (Logic system)
	4~6	+4.85~+5.25V
	7	+10.8~+13.2V

  - ├ N: Replace the power source assembly.
  - └ Y: Is the continuity of the power cord 1,2 normal?
    - ├ N: Reconnect properly.
    - └ Y: Is the continuity of power cords appropriate?
      - ├ N: Is fuse F1 in the MC1 print circuit board burnt?
        - ├ N: Is it recovered by disconnecting CN6 (print head connection cord) of the MC1 print circuit board?
          - ├ N: Check problems in sections connected to CN6 (print head connection cord, print head), and replace faulty sections. (See “10.2.8 Print head movement abnormalities”)
          - └ Y: Replace the MC1 print circuit board.
        - └ Y: Disconnect CN2 in the MC1 print circuit board, and check problems such as short circuits and disconnections in sections connected to CN2 (connection cord, circuit board (MTR-CN5), SP motor). (See “10.2.6 Carriage movement abnormalities”)

          Are there abnormalities?
          - ├ N: Replace the MC1 print circuit board.
          - └ Y: Replace the faulty section.
      - └ To the next page

From the previous page

- Y: Is fuse F2 in the MC1 print circuit board burnt?
  - N: Is it recovered by disconnecting CN6 (print head connection cord) of the MC1 print circuit board?
    - N: Check problems in sections connected to CN6 (print head connection cord, print head), and replace faulty sections. (See “10.2.8 Print head movement abnormalities”)
    - Y: Replace the MC1 print circuit board.
  - Y: Disconnect the following connectors, and check problems such as short circuits and disconnections in sections connected to the connectors (connection cord, circuit board, motor).

Connector	Subjected Load	Section to Refer
CN9	Stepping motor, auto-gap motor	Section 10.2.10
	Ribbon feed motor	Section 10.2.7 Ink ribbon feed abnormalities
CN25	LF motor	Section 10.2.5 Paper feed abnormalities
CN2	Continuous/cut-sheet switch motor	

Are there abnormalities?

- N: Replace the MC1 print circuit board.
- Y: Replace the faulty section.

- Power lamp goes ON with power ON but goes OFF immediately. (power failure)
- Power fails during print operation.

Does power fail by operating the printer power cords 1, 2 disconnected from the MC1 print board circuit? (Determined by measuring the output voltage of the power source.)

- Y: Replace the power source assembly.
- N: Does power fail after recovering by connecting the power cord and disconnecting CN6 (print head connection cord)?
  - N: Check problems in sections connected to CN6 (print head connection cord, print head), and replace faulty sections. (See “10.2.8 Print head movement abnormalities”)
  - Y: Replace the MC1 print circuit board.

10.2.2 Reset circuit abnormalities

- No reaction at power ON
  (Lamp status do not change when the power is turned ON)

└ Is the 24 pin (RST input signal) of Q7 (80C186) at high level after a specified time from turning the power ON?

- N: Is the 11 pin (POW ON RESET-N) of CN4 normal?
  - Y: Replace the MC1 print circuit board.
  - N: Is the continuity of power cords 1 and 2 appropriate?
    - N: Replace the connection cord.
    - Y: Replace the power source assembly.
- Y: Is the 61 pin (ALE signal) of Q7 (80C186) being output normally?
  - N: Replace Q7.
  - Y: Remove the Q29 ROM and reinstall it again.
    Is operation normal?
    - N: Replace the ROM.
      Is operation normal?
      - N: Replace the MC1 print circuit board.
      - Y: End.
    - Y: End.

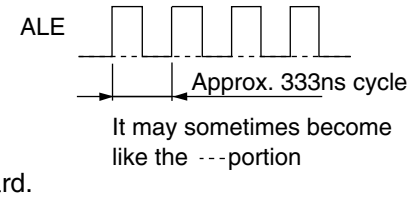

10.2.3 Alarm display

Allocation of switches and lamps

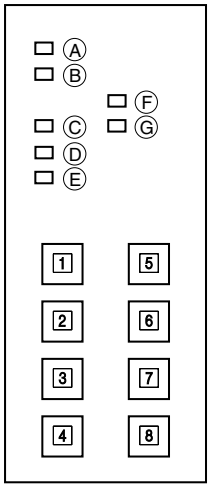

When this printer is faced with a problem, the type of the problem is displayed by the lamp in the operation unit and also in the LCD display.

Problems are displayed by the blinking of Lamps Ⓑ and Ⓒ.

Time chart

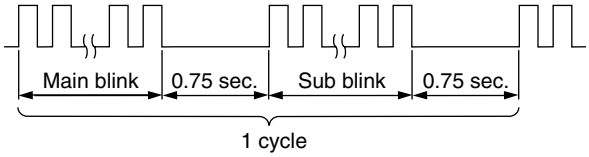

Main blink : Lamps Ⓑ and Ⓒ blink simultaneously.

Sub blink : Lamp Ⓑ blinks only.

Table 10-2

No.	Main blink	Sub blink	LCD Display	Procedure for Repair
1	1	1	ERROR HOMING	See 10.2.6.
2		2	ERROR SPACING	
3		3	ERROR GAP	See 10.2.10.
4		7	ERROR FAN	See 10.2.11.
5		8	ERROR PATHCHANGE	
6	2	1	ERROR PROGRAM ROM	See Section 1.
7		2	ERROR CG-ROM	Replace MC1 print circuit board.
8		3	ERROR OPT CARD ROM	
9	3	1	ERROR S-RAM	Replace MC1 print circuit board.
10		2	ERROR EEPROM	
11		3	ERROR EEPROM	
12		6	ERROR OPT CARD RAM	
13	4	1	ERROR LCD TIME OUT	See 10.2.4.
14		3	ERROR INVALID IPT	Replace MC1 print circuit board.
15		4	ERROR WDT	
16		5	ERROR OPT CARD CONNECT	
17		6	ERROR OPT CARD RAM	
18		7	ERROR OKI HSP CONNECT	
19	8	1	ERROR FUSE	See 10.2.1.
20		2	ERROR HEAD THERMISTOR	See 10.2.11.

1) Replace Q29 ROM.

Is operation normal?

- N: Replace the MC1 print circuit board
- Y: End.

10.2.4 Operation board abnormalities

- Some lamps do not go ON (although carriage moves)

Are all lamps not ON?

- Y: Is the voltage between pin 22 and pins 13, 14, 15 of CN1 on the PJOP print circuit board in the range of 4.5 to 5.5V?
  - N: Is the operation board connection cord connected properly?
    - N: Reconnect the cord properly.
    - Y: Is there continuity in the connection cord of the operation board?
      - N: Replace the cord.
      - Y: The voltage between pins 23, 24 pins 2, 4 of CN1 on the MTR print circuit board in the range of 4.5 to 5.5V.
        - N: Are the connection cords for MTR and MC1 connected properly?
          - N: Reconnect properly.
          - Y: Is there continuity in the connection cord?
            - N: Replace the cord.
            - Y: Replace the MTR print circuit board.
        - Y: Replace the MTR print circuit board.
  - Y: Replace the PJOP print circuit board.
- N: Is the operation board connection cord connected properly?
  - N: Reconnect the cord properly.
  - Y: Is there continuity in the operation board connection cord?
    - N: Replace the cord.
    - Y: Remove the PJOP print circuit board and confirm that the lamps go ON according to the table below.

Lamp	PJOP Print Circuit Board Pin No. of CN1	Method
Ⓐ	22 pin (+), 13, 14, 15 pin (-)	Apply DC5V (approx. 150Ω in seriese)
Ⓑ	4 pin (+), 13, 14, 15 pin (-)	
Ⓒ	6 pin (+), 13, 14, 15 pin (-)	
Ⓓ	8 pin (+), 13, 14, 15 pin (-)	
Ⓔ	10 pin (+), 13, 14, 15 pin (-)	
Ⓕ	24 pin (+), 13, 14, 15 pin (-)	Apply DC5V
Ⓖ	12 pin (+), 13, 14, 15 pin (-)	Apply DC5V (approx. 150Ω in seriese)

Are all lamps not ON?

- N: Replace the MTR print circuit board.
- Y: Replace the PJOP print circuit board.

- Some lamps stay ON (excluding the power lamp)

└─Remove the PJOP print circuit board and confirm that no lamp terminals and connection patterns are in short circuit with other terminals and patterns.

└─Is there a short circuit?

├─ N: Replace the MTR print circuit board.

└─ Y: Replace the PJOP print circuit board.

- There are some switches that do not function, or some that keep functioning.
- The mode changes to one other than the normal mode arbitrarily after extracting datum.

└─Remove the PJOP print circuit board and confirm that the area between signal terminal of each connector switch and ground goes ON/OFF normally.

Switch	PJOP Print Circuit Board Pin No. of CN1	Remarks
1	1 Pin – 7 Pin (earth)	
2	3 Pin – 7 Pin	
3	9 Pin – 7 Pin	
4	9 Pin – 11 Pin	
5	3 Pin – 2 Pin	
6	9 Pin – 2 Pin	
7	1 Pin – 11 Pin	
8	3 Pin – 11 Pin	

└─ Do they go ON / OFF normally?

├─ N: Replace the PJOP print circuit board.

└─ Y: Check for short circuits between switches and also in the other signal lines.

└─Is there a short circuit?

├─ Y: Replace the PJOP print circuit board.

└─ N: Replace the MTR print circuit board.

10.2.5 Paper feed abnormalities

- Paper-end is detected even when paper is set. (Lamp Ⓑ goes ON)

1) When using continuous paper (front tractor)
   Is [Front Feed] selected in the LCD?
   - N: Select [Front Feed] by pressing SW 5 in the off-line mode.
   - Y: Are cut-sheets also set?
     - Y: Remove the cut-sheets.
     - N: Perform sensor check in the maintenance mode, actually set and send paper to the paper-end sensor by turning the platen knob, and confirm that the sensor is changing normally.
       - N: Was the auto adjustment of the sensor slice level performed?
         - N: Perform the auto adjustment of the sensor slice level.
         - Y: Is a connector cord properly connected to CN13 on the MC1 print circuit board?
           - N: Connect properly.
           - Y: Is there continuity in the connection cord?
             - N: Replace the cord.
             - Y: Measure the voltage level of check terminal CH10 on the MC1 print circuit board, and check if there is a level difference of 2V or above with the sensor ON and OFF.
               - N: Replace the sensor assembly.
               - Y: Replace the MC1 print circuit board.

2) When using continuous paper (rear tractor: option)
   Is [Rear Feed] selected in the LCD?
   - N: Select [Rear Feed] by pressing SW 5 in the off-line mode.
   - Y: Are cut-sheets also set?
     - Y: Remove the cut-sheets.
     - N: Perform sensor check in the maintenance mode, actually set and send paper to the paper-end sensor by turning the platen knob, and confirm that the sensor is changing normally.
       - N: Was the auto adjustment of the sensor slice level performed?
         - N: Perform the auto adjustment of the sensor slice level.
         - Y: Is a connector cord properly connected to CN1 on the MC1 print circuit board?
           - N: Connect properly.
           - Y: Is there continuity in the connection cord?
             - N: Replace the cord.
             - Y: Is a connection cord properly connected to CN7 on the MTR print circuit board?
               - N: Reconnect properly.
               - Y: Confirm that there are not short circuit or other abnormalities between wire patterns or terminals on the MTR print circuit board.
                 - N: Replace the MTR print circuit board.
                 - Y: Measure the voltage level of check terminal CH11 on the MC1 print circuit board, and check if there is a level difference of 2V or above with the sensor ON and OFF.
                   - N: Replace the sensor assembly.
                   - Y: Replace the MC1 print circuit board.

3) When using cut-sheets

Is [Manual Feed] selected in the LCD?

- N: Select [Manual Feed] by pressing SW 5 in the off-line mode.
- Y: Is continuous paper also set?
  - Y: Remove the continuous paper.
  - N: Perform sensor check in the maintenance mode, actually set and send paper to the paper-end sensor by turning the platen knob, and confirm that the sensor is changing normally.
    - N: Was the auto adjustment of the sensor slice level performed?
      - N: Perform the auto adjustment of the sensor slice level.
      - Y: Is a connector cord properly connected to CN13 on the MC1 print circuit board?
        - N: Connect properly.
        - Y: Is there continuity in the connection cord?
          - N: Replace the cord.
          - Y: Measure the voltage level of check terminal CH12 on the MC1 print circuit board, and check if there is a level difference of 2V or above with the sensor ON and OFF.
            - N: Replace the sensor assembly.
            - Y: Replace the MC1 print circuit board.

- Paper-end is not detected even when there is no paper. (Lamp Ⓑ does not go ON)

1) When using continuous paper (front tractor)
   Is [Front Feed] selected in the LCD?
   - Y: Select [Front Feed] by pressing SW 5 in the off-line mode.
   - N: Perform sensor check in the maintenance mode, actually set and send paper to the paper-end sensor by turning the platen knob, and confirm that the sensor is changing normally.
     - N: Was the auto adjustment of the sensor slice level performed?
       - N: Perform the auto adjustment of the sensor slice level.
       - Y: Is a connector cord properly connected to CN13 on the MC1 print circuit board?
         - N: Connect properly.
         - Y: Is there continuity in the connection cord?
           - N: Replace the cord.
           - Y: Measure the voltage level of check terminal CH10 on the MC1 print circuit board, and check if there is a level difference of 2V or above with the sensor ON and OFF.
             - N: Replace the sensor assembly.
             - Y: Replace the MC1 print circuit board.

2) When using continuous paper (rear tractor: option)
   Is [Rear Feed] selected in the LCD?
   - Y: Select [Rear Feed] by pressing SW 5 in the off-line mode.
   - N: Perform sensor check in the maintenance mode, actually set and send paper to the paper-end sensor by turning the platen knob, and confirm that the sensor is changing normally.
     - N: Was the auto adjustment of the sensor slice level performed?
       - N: Perform the auto adjustment of the sensor slice level.
       - Y: Is a connector cord properly connected to CN1 on the MC1 print circuit board?
         - N: Connect properly.
         - Y: Is there continuity in the connection cord?
           - N: Replace the cord.
           - Y: Is a connection cord properly connected to CN7 on the MTR print circuit board?
             - N: Reconnect properly.
             - Y: Confirm that there are not short circuit or other abnormalities between wire patterns or terminals on the MTR print circuit board.
               - N: Replace the MTR print circuit board.
               - Y: Measure the voltage level of check terminal CH11 on the MC1 print circuit board, and check if there is a level difference of 2V or above with the sensor ON and OFF.
                 - N: Replace the sensor assembly.
                 - Y: Replace the MC1 print circuit board.

3) When using cut-sheets

Is [Manual Feed] selected in the LCD?

- N: Select [Manual Feed] by pressing SW 5 in the off-line mode.
- Y: Set the menu mode and perform menu print.

  Is it set so that paper-end would be output when paper-end is detected in the cut-sheet manual mode?

  - Y: Change the paper-end setting to OFF-LINE and confirm recovery.
    GO to [N] if it does not recover.
  - N: Perform sensor check in the maintenance mode, actually set and send paper to the paper-end sensor by turning the platen knob, and confirm that the sensor is changing normally.
    - N: Was the auto adjustment of the sensor slice level performed?
      - N: Perform the auto adjustment of the sensor slice level.
      - Y: Is a connector cord properly connected to CN13 on the MC1 print circuit board?
        - N: Connect properly.
        - Y: Is there continuity in the connection cord?
          - N: Replace the cord.
          - Y: Measure the voltage level of check terminal CH12 on the MC1 print circuit board, and check if there is a level difference of 2V or above with the sensor ON and OFF.
            - N: Replace the sensor assembly.
            - Y: Replace the MC1 print circuit board.

- Paper is not fed at all, or spaces between lines are abnormal.
- LF motor hums abnormally.

Does the platen knob rotate smoothly with the power turned OFF?

- N: Remove the mini pitch belt from the LF motor gear and rotate the LF motor by hand, or turn ON the power and operate LF/FF.

  Does the LF motor rotate smoothly?

  - N: Replace the LF motor.
  - Y: Is the tension of the mini pitch belt normal?
    - N: Adjust the tension of the mini pitch belt.
    - Y: Is the teeth of the mini pitch belt damaged?
      - Y: Replace the mini pitch belt.
      - N: End.
- Y: Measure the resistance between each terminal of the LF motor at the following location, and check for abnormalities such as disconnected wires or short circuits with other wires. [During normal operation: approx. 8.5Ω/phase (ambient temperature)]

  Is it normal at CN10 (LF motor side) on the MC1 print circuit board (remove the connector)?

  - N: Replace the LF motor.
  - Y: Replace the MC1 print circuit board

- Paper jam occurs repeatedly.
- Paper is torn.
- Skews are generated.

└─Is the paper route clogged with paper dust?

├─Y: Eliminate the paper dust.

└─N: Is the pin tractor and paper sprocket hole adjusted properly?

├─N: Set the sheet feeder assembly so that the pin tractor pin comes to the center of the paper sprocket hole.

└─Y: Is the auto gap mode selected?

├─Y: Correct the amount for auto paper weight adjustment. (See Section 8.5)

└─N: When in the manual gap mode, does [GAP X] (X=1~8, A~E) displayed in the LCD during a print job match the thickness of the paper?

├─N: Reset the manual gap by adjusting it to the paper thickness.

└─Y: Does paper run smoothly between the platen and ribbon protector?

├─N: Reinstall or replace the ribbon protector.

└─Y: Is the rhombus hole of the ribbon protector deformed?

├─Y: Replace the ribbon protector.

└─N: Are the left and right phases of the pin tractor belt matched?

├─N: Match the phases of the pin tractor belt.

└─Y: Is paper fed smoothly from the pin tractor belt to the sprocket wheel?

├─N: Adjust the phases of the pin tractor belt and sprocket wheel.

└─Y: End.

10.2.6 Carriage movement abnormalities

- Space between characters is abnormal, characters overlap, or print position is skewed.
- ERROR HOMING (homing error) occurs.
- ERROR SPACING (spacing error) occurs.

Turn OFF the power, remove the ribbon cartridge, and turn the ribbon feed knob by hand.

- Can the ink ribbon be wound easily?
  - N: Replace the ribbon cartridge.
  - Y: Does the carriage move smoothly when pushed by hand?
    - Y: Is CN8 (connection cord) connected properly?
      - N: Reconnect properly.
      - Y: Are the linear sensor and linear scale interfering the carriage pushed by hand, or are they disconnected?
        - Y: Set properly.
        - N: Move the carriage by hand with the power ON, and confirm that the ϕA and ϕB signals are being output as shown below.

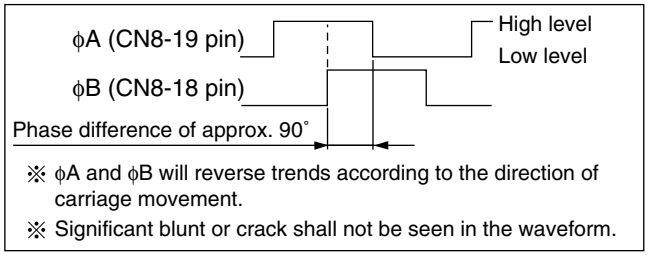

        - Is the waveform normal?
          - N: Replace the linear sensor assembly.
          - Y: Is the connection between CN2 on the MC1 print circuit board and MTR CN12 on the MTR print circuit board normal?
            - N: Connect properly. Replace the connection cord or MTR circuit board if there are any short circuits or wire disconnections.
            - Y: Is CN1 on the MTR print circuit board connected properly?
              - N: Reconnect properly.
              - Y: Measure the resistance between the space motor terminals.

                [During normal operation: approx. 2.6 to 3.2Ω phase (ambient temperature)]
                - Are there abnormalities such as disconnected wires, short circuits, or faulty connections?
                  - N: Replace the space motor assembly.
                  - Y: Replace the MC1 print circuit board.
    - To the next page

From the previous page

- N: Is the auto gap mode selected?
  - Y: Correct the amount for auto paper weight adjustment. (See Section 8.5)
  - N: When in the manual gap mode, does [GAP X] (X=1~8, A~E) displayed in the LCD during a print job match with the paper thickness?
    - N: Reset the manual gap by adjusting it to the paper thickness.
    - Y: Does paper run smoothly between the platen and ribbon protector?
      - N: Reinstall or replace the ribbon protector.
      - Y: Is paper dust formed on the main shaft being a load?
        - N: Clean and lubricate the main tractor.
        - Y: Is the tension of the mini pitch belt normal?
          - N: Adjust the tension of the mini pitch belt.
          - Y: Is the teeth of the mini pitch belt damaged?
            - N: Replace the mini pitch belt.
            - Y: Is the rotation of the idle pulley dull?
              - Y: Replace the idle pulley.
              - N: Is the rotation of the space motor dull?
                - Y: Replace the space motor assembly.
                - N: End.

10.2.7 Ink ribbon feed abnormalities

- Ink ribbon is nor fed normally or not fed at all.
- Ink ribbon jams occur.
- Print result is faint, dirty, or print density is inconsistent.

└─Can the problems be eliminated by replacing the ribbon cartridge?
- ├─Y: Replace the ribbon cartridge.
- └─N: Is the auto gap mode selected?
  - ├─Y: Correct the amount for auto paper weight adjustment. (See Section 8.5)
  - └─N: When in the manual gap mode, does [GAP X] (X=1~8, A~E) displayed in the LCD during a print job match with the paper thickness?
    - ├─N: Reset the manual gap by adjusting it to the paper thickness.
    - └─Y: Does paper run smoothly between the platen and ribbon protector?
      - ├─N: Is the rhombus hole of the ribbon protector deformed?
        - ├─Y: Replace the ribbon protector.
        - └─N: Is the link between the coupling gear and ribbon cartridge smooth?
          - ├─N: Replace the coupling gear.
          - └─Y: Is the planetary gear shifting smoothly?
            - └─Y: Replace the ribbon feed assembly.
      - └─Y: Does the coupling piece rotate smoothly with the ribbon cartridge removed? (Rotation upon power ON or print jobs)
        - ├─Y: Is the link between the coupling gear and ribbon cartridge smooth?
          - ├─N: Replace the coupling gear.
          - └─Y: Is the planetary gear shifting smoothly?
            - └─Y: Replace the ribbon feed assembly.
        - └─N: Is CN9 (motor side) on the MC1 print circuit board normal (connector removed)? [During normal operation: approx. 200Ω/phase]
          - ├─N: Replace the ribbon feeder motor.
          - └─Y: Replace the MC1 print circuit board.

10.2.8 Print head movement abnormalities

- Dots are omitted, or unnecessary dots are printed.
- Print results are skewed.
- Nothing is printed (although the carriage moves).

└ Is the auto gap mode selected?

- ├ Y: Correct the amount for auto paper weight adjustment. (See Section 8.5)
- └ N: Is the auto gap mode selected?
  - ├ Y: Correct the amount for auto paper weight adjustment. (See Section 8.5)
  - └ N: When in the manual gap mode, does [GAP X] (X=1~8, A~E) displayed in the LCD during a print job match with the paper thickness?
    - ├ N: Reset the manual gap by adjusting it to the paper thickness.
    - └ Y: Is CN6 (head connection cord) connected properly?
      - ├ N: Reconnect properly.
      - └ Y: Remove the print head and confirm that there is no filth such as paper dust or ink ribbon dust as well as broken pins.
        - └ Are there any problems?
          - ├ N: Clean or replace the print head.
          - └ Y: Measure the coil resistance between the dot terminals of the print head, and confirm that it is at a normal value (5.0 to 6.0Ω in ambient temperature, the resistance value will increase when the temperature of the print head rises).

            Also confirm that there are no short circuits or half-short circuits between the terminal and other terminals or FG (head cabinet).
            - └ Are there any problems?
              - ├ N: Replace the print head.
              - └ Y: Confirm the continuity of the print head connection cord, as well as short circuits or half-short circuits with other terminals or FG.
                - └ Are there any problems?
                - ├ N: Replace the print head connection cord.
                - └ Y: Replace the MC1 print circuit board.

10.2.9 Interface abnormalities

- Lamp [E] is ON but the printer does not print (no reaction).
- Print is not performed after Lamp Ⓔ goes ON.
- Error or false contents are printed.

Press SW [1] with the power ON repeatedly.

Does Lamp Ⓔ go ON and OFF repeatedly?

Y: (Data can be received in this condition.)

: Investigate the following:

1) Confirm continuity and short circuits with other wires (signal, +5V, 0V, etc.) in the same signals between the interface cords, MIF print circuit board, interface connection cords, and MC1 print circuit board routes. Replace any abnormal sections found.
2) Set the printer to a hex dump mode (by turning ON the power while pressing SW [6], [7], [8]), and print data received from the host computer.
   - If the printed code is garbled, investigate according to the above section 1). If no abnormalities are confirmed, replace the MC1 print circuit board.

N: (Data cannot be received in this condition.)

: Investigate the following:

3) Turn ON the power, and confirm the following interface signals when Lamp Ⓔ goes ON after homing.

Signal	Measured Section	Normal Level
ACK-N	CN3-10 pin	H level
BUSY-P	CN3-11 pin	L level
PE-P	CN3-12 pin	L level

If abnormalities are confirmed, investigate according to the above section 1). If no abnormalities are confirmed after investigating 1), replace the MC1 print circuit board.

4) Confirm whether normal strobe signals are input in pin 1 of CN3 on the MC1 print circuit board.
   - If abnormalities are confirmed, investigate according to the above section 1). If no abnormalities are confirmed, adjust the host computer.
   - If normal strobe signals are input, replace the MC1 print circuit board.

10.2.10 Abnormalities in auto paper weight adjusting movement

- ERROR GAP

└─Measure the resistance between each terminal of the auto gap motor assembly at the following location, and check for abnormalities such as disconnected wires or short circuits with other wires.

└─Is it normal at CN9 (motor side) (remove the connector)?

[During normal operation: approx. 142Ω/phase (ambient temperature)]

├─N: Replace the auto gap motor assembly.

└─Y: Does the connection cord have continuity?

├─N: Replace the connection cord.

└─Y: Replace the MC1 print circuit board.

10.2.11 Other non-recoverable alarms

- ERROR FAN

- Are the connection cords properly connected between CN4 on the MC1 print circuit board, power source connector fanout, and power source fan assembly?
  - N: Connect properly.
  - Y: Do the connection cords have continuity?
    - N: Replace the connection cord.
    - Y: Is the wire pattern of the power source cut off or having a short circuit?
      - Y: Replace the power source.
      - N: Replace the power source fan assembly.

- Are the connection cords properly connected between CN8 on the MC1 print circuit board and carriage?
  - N: Connect properly.
  - Y: Do the connection cords have continuity?
    - N: Replace the connection cord.
    - Y: Replace the head fan.

- Are the connection cords properly connected between CN2 on the MC1 print circuit board, CN13 on the MTR print circuit board, and space fan?
  - N: Connect properly.
  - Y: Do the connection cords have continuity?
    - N: Replace the connection cord.
    - Y: Is the wire pattern of the MTR print circuit board cut off or having a short circuit?
      - Y: Replace the MTR print circuit board.
      - N: Replace the space FAN.

- When the problem does not apply to any of the above cases, replace the MC1 print circuit board

- ERROR PATH CHANGE

Are the connection cords properly connected between CN2 on the MC1 print circuit board, CN12 on the MTR print circuit board, and continuous/cut-sheet switch motor?

- N: Connect properly.
- Y: Do the connection cords have continuity?
  - N: Replace the connection cord.
  - Y: Is the wire pattern of the MTR print circuit board open or having a short circuit?
    - Y: Replace the MTR print circuit board.
    - N: Measure the resistance between each terminal of the continuous/cut-sheet switch motor, and check for abnormalities such as disconnected wires or short circuits with other wires. [During normal operation: approx. 200Ω/phase (ambient temperature)]
      - N: Replace the continuous/cut-sheet switch motor.
      - Y: Replace the MC1 print circuit board.

- ERROR HEAD THERMISTOR

Are the connection cords properly connected between CN6 on the MC1 print circuit board and print head?

- N: Connect properly.
- Y: Do the connection cords have continuity?
  - N: Replace the connection cord.
  - Y: Replace the print head.
    - N: Replace the MC1 print circuit board.

11. MAINTENANCE PARTS

Maintenance parts (Mechanical unit, control unit) for 100 printer units/year under the following conditions are listed in the table below.

1) Conditions for usage
   Mechanical unit: Estimated operation time is 2hr/day, 50hr/month.
   Control unit: Estimated power ON time is 8hr/day, 200hr/month.
   * The time that will affect the quantity is not considered according to maintenance conditions.

2) Level of necessity
   A: Part that need to be increased according to the increase in the applied number of units.
   B: Parts that do not necessarily need to be increased even when the applied number of unit is increased.
   C: Parts which may be desirable to be in stock.

Table 11-1(1/2) Maintenance Parts

No.	Parts	Diagram No.	No./ Unit	No. of Mainte-nance Parts	Necessity Level	Remarks
1	Print head	41015501	1	8	A	
2	Space motor	41139202	1	3	A	
3	SP motor fan	41283601	1	2	B	
4	LF motor	41339603	1	2	B	
5	Stage sensor assembly	41325601	1	3	B	
6	Mini pitch belt (LF)	4LP-1313-148	1	5	B	
7	Platen	41151201	1	3	A	
8	Hopper pulse motor	41715901	1	2	B	
9	Sprocket assembly (L)	41227301	1	2	C	
10	Sprocket assembly (R)	41227401	1	2	C	
11	Space belt	4PB4053-3657P001	1	5	B	
12	Rear tractor assembly (LF belt)	41151801	1	5	B	
13	Ribbon feed assembly	3YX4053-3727G001	1	2	B	
14	Head cable assembly	41404701	1	3	B	
15	Ribbon protector	41373601	1	8	A	
16	Continuous/cut-sheet pulse motor	41144103	1	2	B	
17	EI sensor assembly	41161901	1	2	C	
18	Front sensor/jam assembly	41163101	1	2	B	
19	Front PE sensor assembly	41341801	1	2	B	
20	Rear PE sensor/jam assembly	41163402	1	2	B	
21	Stage open sensor assembly	41332303	1	2	B	
22	Cover open sensor assembly	41167201	1	2	B	
23	AG motor	41037201	1	2	B	

Table 11-1(2/2) Maintenance Parts

No.	Parts	Diagram No.	No./ Unit	No. of Mainte-nance Parts	Necessity Level	Remarks
24	AG sensor board	40751101	1	2	B	
25	Linear assembly	41178901	1	2	B	
26	Linear scale	4PB4053-3724P001	1	2	B	
27	LCD bracket assembly	41327401	1	2	B	
28	CSF sensor assembly	41167901	1	2	B	
29	Ribbon guide	41161301	1	2	B	
30	Head fan assembly	41327202	1	2	B	
31	Control board	41300614	1	2	B	
32	Continuous/cut-sheet sensor board	41300902	1	2	B	
33	MTR board (relay board)	41300804	1	2	B	
34	MIF board (I/F board)	41300702	1	2	B	
35	Power source	40947101	1	2	B	
36	Fan assembly	4YX4041-1545G002	1	2	B	
37	Operation board	40289915	1	2	B	
38	Paper width sensor (L)	41202701	1	2	B	
39	Paper width sensor (R)	41242701	1	2	B	
40	Middle frame bracket (R) assembly	41175301	1	2	B	

12. DESCRIPTION OF OPERATIONS

12.1 Summary (See Figure 12-1)

This device is mainly structured by the print mechanical unit and print control unit. The print mechanical unit could be divided mainly into the print head, space system, line-feed system, ribbon-feed system, and auto-gap system, and their operations are indicated below.

1) Print head:
   Print is performed by the 24 wire-dot magnets. Dot patterns are configured by the print control unit.

2) Space system:
   The DC motor moves the carriage and performs space, tab, and carriage return.

3) Line-feed system:
   Line feed is performed by the stepping motor, and continuous and cut-sheets are fed.

4) Ribbon-feed system:
   Drive force is obtained from the stepping motor to feed the ribbon.

5) Auto-gap system:
   The carriage is moved up and down by the stepping motor, and the space between the print head and platen is adjusted to a position where appropriate print pressure that conforms to the paper thickness could be obtained.

6) Print control unit:
   The interface control and mechanical control are controlled by one microprocessor (referred to as μCPU hereafter) 80C186.

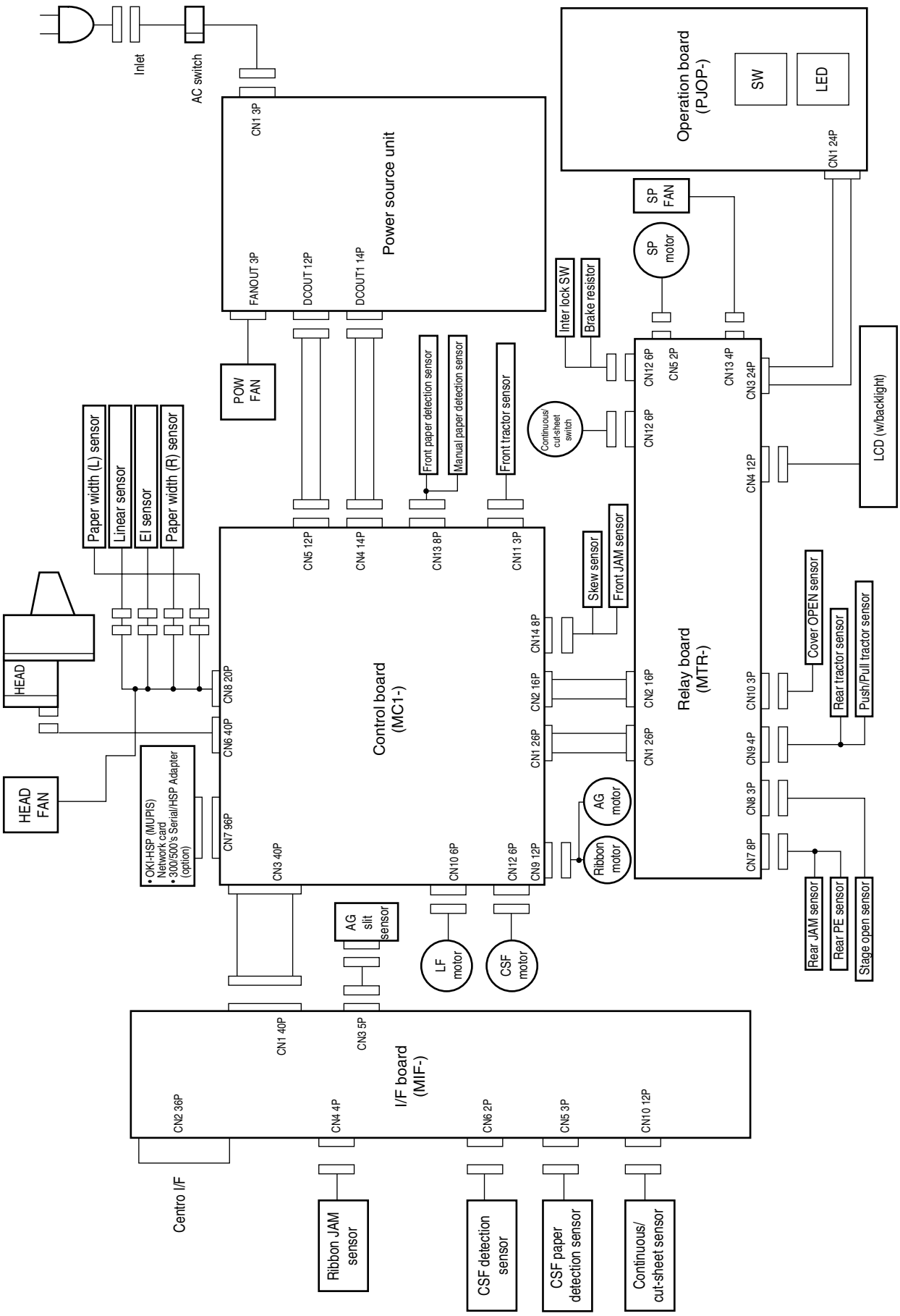

Figure 12-1 Connection Diagram

12.2 Circuit Operation (See Figure 12-2)

The control circuit is structured by the μCPU (03D) along with various peripheral LSI.

12.2.1 μCPU (Q7) and peripheral circuits

1) μCPU (Q7)
   μCPU, the hub of the control circuit, controls peripheral LSI and the printer in general.

2) Program ROM (Q29)
   The control program is stored in the program ROM. μCPU operates according to this contents.

3) EEPROM (Q1)
   Data to set various modes are input, and the data is maintained even when the power is turned OFF.

4) LSI [MSM91U036] (Q14)
   MSM91U036 is an LSI to control the head data, DC motor, and print data modifier, and has the following functions.
   a) Head data control
      Expands print data stored in the D-RAM by adjusting it to the wire allocation of the print head, and outputs as dot data in sync with the print timing. At that time, expansion in various print mode are performed according to the print mode designation from μCPU.
   b) Print timing control
      Outputs the control signal for the print timing of the ODD and EVEN pins of the print head.
   c) Speed control of the space motor
      The space motor speed is increased/decreased by the micro program control. The speed of the space motor in various print modes is also control.
   d) Head position count
      By counting the output (SPPHASE A, B) of the linear scale installed in the rear side of the print head, the current position of the print head is constantly monitored.
   e) D-RAM control
      Controls refreshing, etc. of the D-RAM that holds various data.
   f) Print data modifier
      Modifies print data stored in the D-RAM by inputting commands from μCPU.
   g) DMA control
      Controls DMA and outputs DMA requests against μCPU.

5) D-RAM (Q19)
   Used for memorizing various data of the print mode, etc.

6) LSI [TCC190G08CF-7036] (Q18)
   MSM38S0570-017 is an LSI to control the stepping motor, I/F, ROM, and operation board, and has the following functions.
   a) Stepping motor control
      Controls various motors by the input command from μCPU.
   b) I/F command
      Controls the I/F conforming with IEEE1284 by the input command from μCPU.
   c) ROM control
      Controls CGROM, E2ROM, etc. by the input command from μCPU.
   d) Operation board control
      Controls the operation board switch, lamp, and LCD of the operation board LSI by the input command from μCPU.

7) LSI [MSM72V017] (Q34, Q35)

MSM72V017 is an LSI for the I/O port that inputs and outputs various control signals by the input command from μCPU.

a) MSM72V017 (Q35)

I/F control signals, fan control signals, various sensor control signals, AG, LF motor control signals are allocated.

b) MSM72V017 (Q34)

Various sensor control signals, AG, HOP, auto continuous/cut-sheet switch motor control signals are allocated.

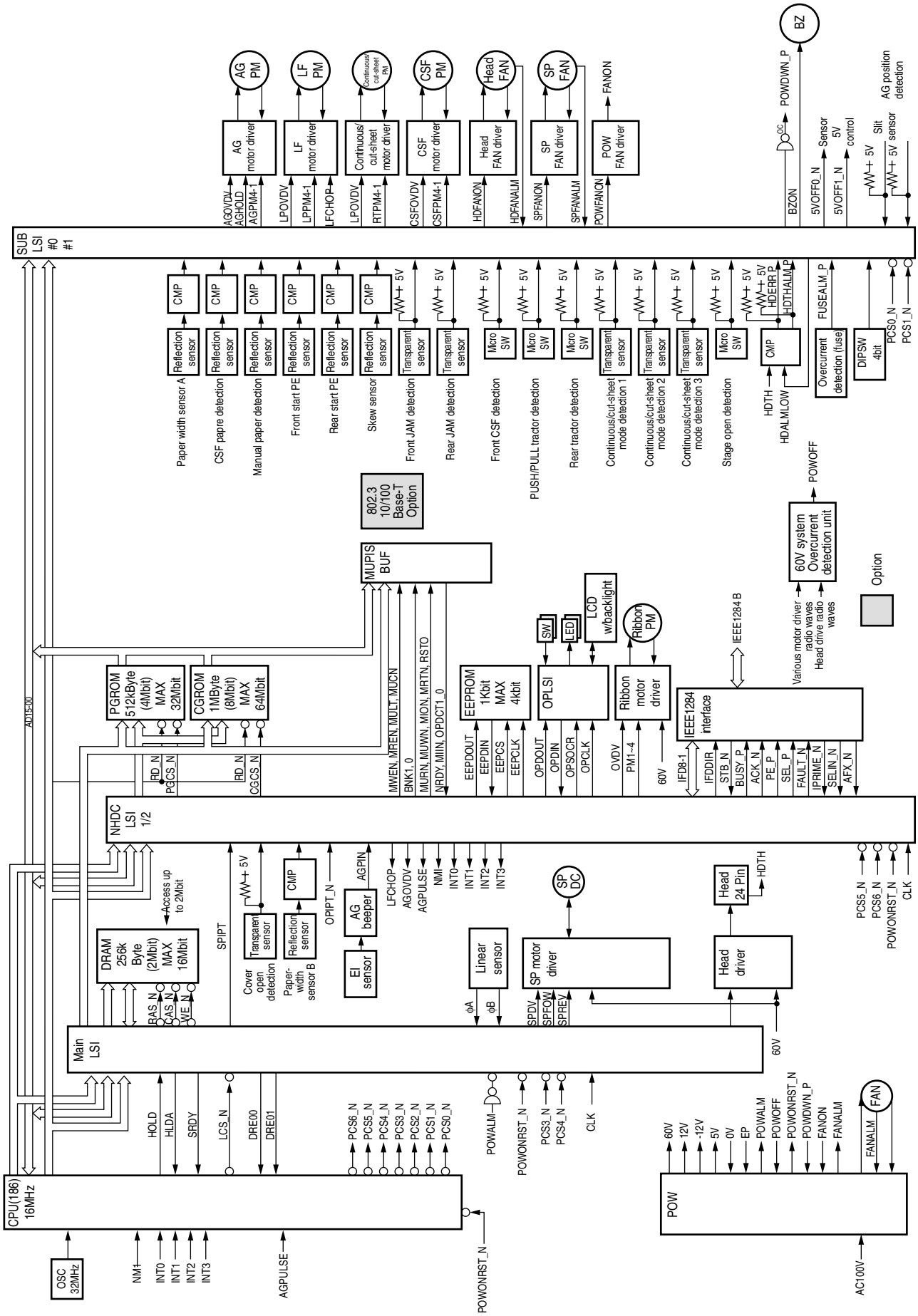

Figure 12-2 CPU and Peripheral Circuits

12.3 Mechanical Operation

12.3.1 Mechanism and operation of the print head (See Figures 12-3, 12-4)

The print head is a spring charge-type head using a permanent magnet and is mounted on a carriage that moves in parallel with the platen.

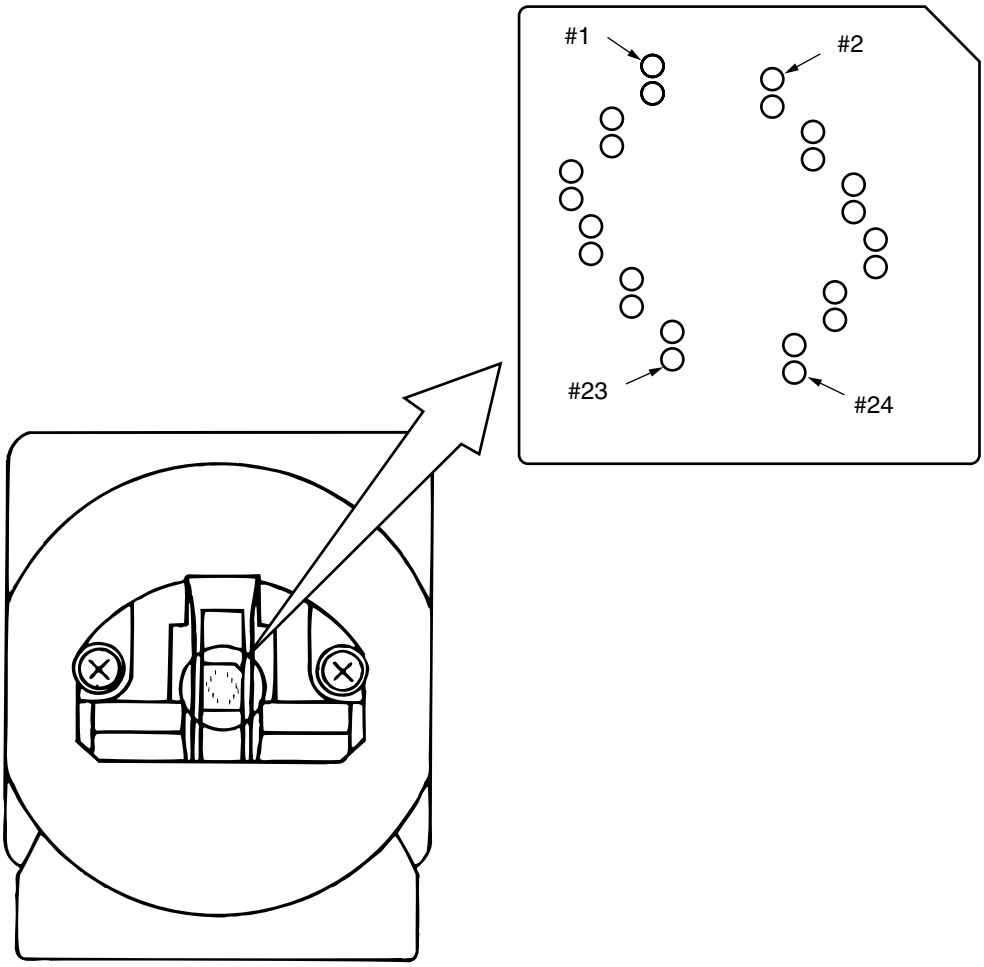

Figures 12-3 Head Pin Allocation
(Viewed from the tip of the print head)

1) Print head operation (See Figure 12-4)

An armature usually warps an armature spring by the permanent magnet and is absorbed on the core. The print wire that is integrated with the armature is in a reset state.

When the magnet coil is energized by the print command from the device control unit, magnetic flux opposite to that of the permanent magnet is generated, then the armature is sprung to the opposite direction from the core by the armature spring, and the print wire collides with the platen. Paper and ink ribbon is set between the platen and print wire, and with this collision, the ink on the ink ribbon is transferred to the paper and data is printed.

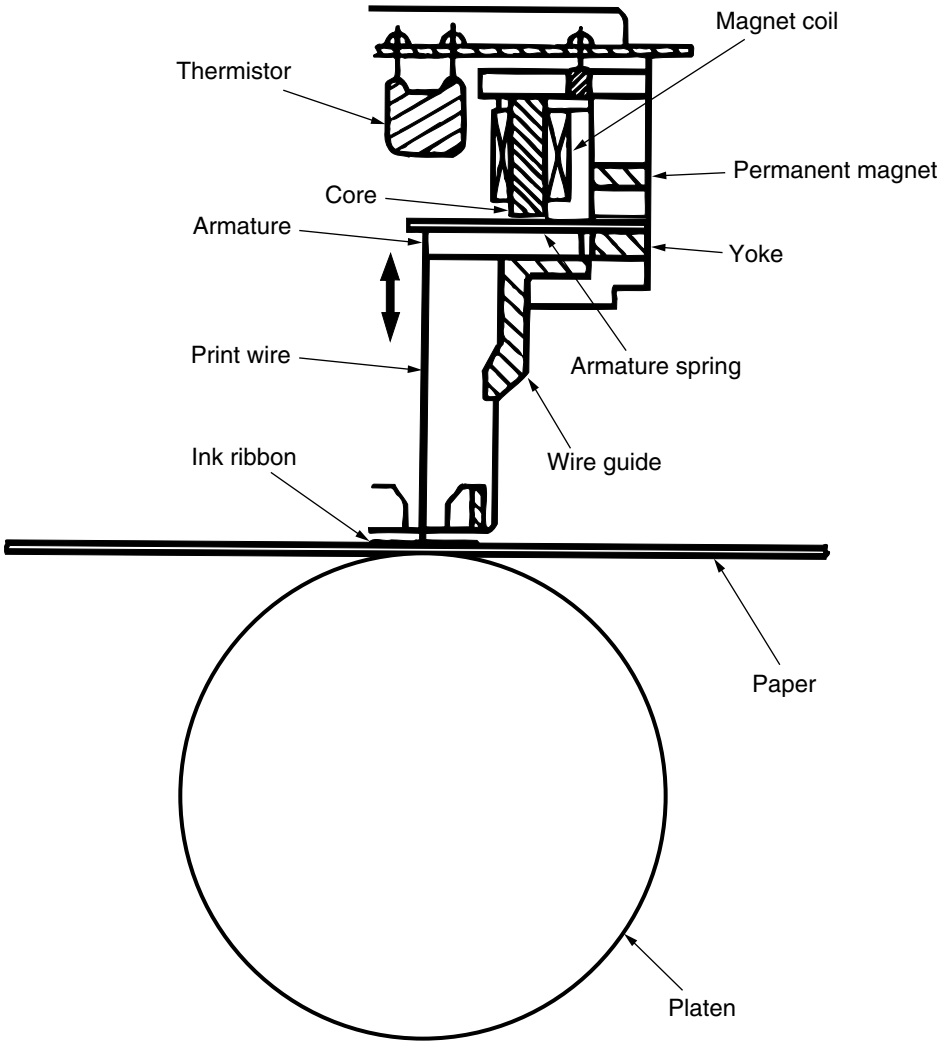

Figure 12-4

12.3.2 Space mechanism and operation

Spacing is done by driving the main shaft attached in parallel with the platen along with the carriage on the guide bracket with the DC servo motor.

1) Spacing operation (See Figure 12-5)

The carriage mounted with a print head which is moved in parallel with the platen by the main shaft and guide bracket, is secured to the mini pitch belt in the rear section of the carriage frame. When the DC servo motor rotates to the left when seen from top of the motor, the drive force is sent to the mini pitch belt and the carriage move from left to right. The rotation angle and speed of the DC motor is controlled by the number of ϕA, ϕB (maintains phase difference of approx. 90˚) signals released from the encoder of the linear sensor and by the interval of the signal. The rotating direction is identified by the phase difference sign of ϕA, ϕB.

It is mechanically designed so that the carriage moves 42.33mm when the DC servo motor rotates one time.

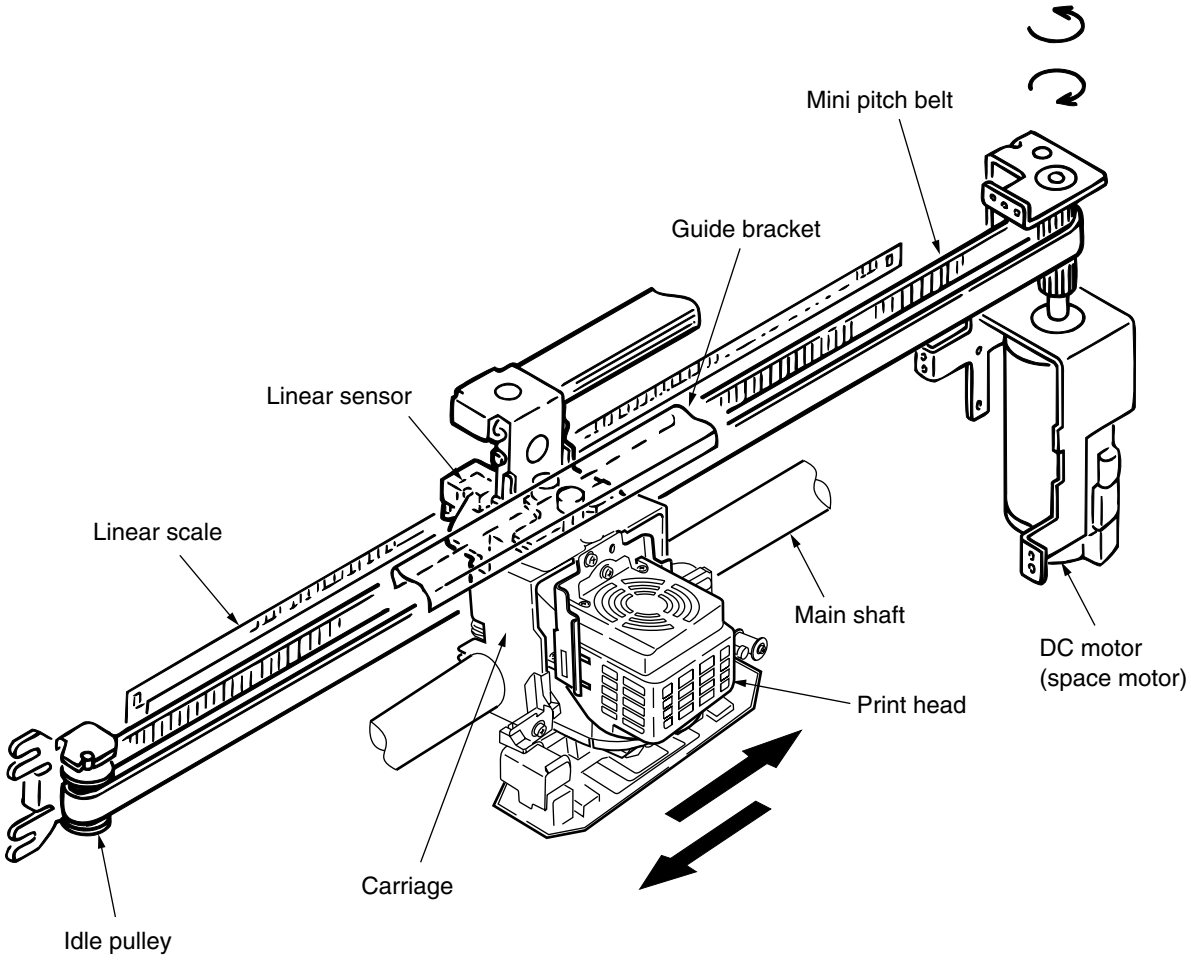

Figure 12-5 Spacing Mechanism

12.3.3 Ribbon feed mechanism and operation (See Figure 12-6)

Ribbon feed is a mechanism to feed the ink ribbon and is driven by the stepping motor.

1) Ribbon cartridge

A one-way feed endless ribbon is used as the ink ribbon, and clear print results are constantly provided by this mechanism.

2) Feed operation

Ribbon feed is initiated at the same time as the spacing operation not only during a print job, and stops when the spacing operation ends.

When the stepping motor is driven, the rotation is transferred to the drive roller within the ribbon cartridge via the ribbon feed gear, and the ink ribbon is fed.

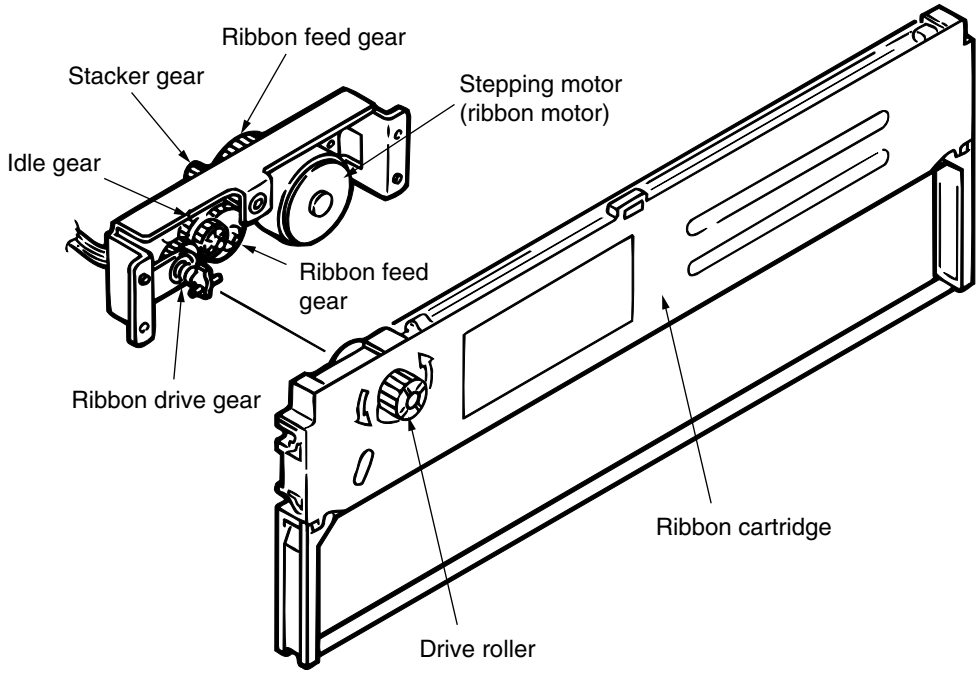

Figure 12-6 Ribbon Feed Mechanism

12.3.4 Mechanism of the head gap adjustment

In the head gap adjusting mechanism, the range of adjustment is set in the operator panel. There are two adjusting mechanisms: 1) the manual gap adjusting mechanism that adjusts the range between the print head and platen according to the thickness of the paper, and 2) auto gap adjusting mechanism that makes automatic adjustments.

1) Switch mechanism between auto gap and manual gap

   Switch the paper thickness adjustment between [Auto] and [Manual Gap X (X=1~8, A~E)] in the operator panel.

2) Manual gap adjusting mechanism

   Rotate the auto gap motor, rotate the main shaft while moving it up and down, and set the distance between the print head and the platen to a range in accordance with the paper thickness.

   A gear and adjust CAM is linked directly to the main shaft. Furthermore, the main shaft is constantly pulled toward the upper portion of the device by a spring via the lift arm.

   When the range is set from [1] to [E], the auto gap motor starts to rotate, then the main shaft and slide CAM begins to rotate via the idle gear [A] to [E].The slide CAM is in contact with the roller, and the main shaft moves up and down by the change in distance between the slide CAM and roller caused by the rotation. Thus, the distance between the print head and platen is increased or decreased.

   The up/down movement of the print head is performed by counting the number of slit signals release from É"A, É"B of the slit sensor of the slit disk attached to the main shaft, and controlling the rotation of the main shaft

   Furthermore, in order to upgrade the print quality on copying paper, the drive condition of the print head has been changed so that print force is increased at the range of [3] or above. This is done by detecting the number of slits on the main shaft.

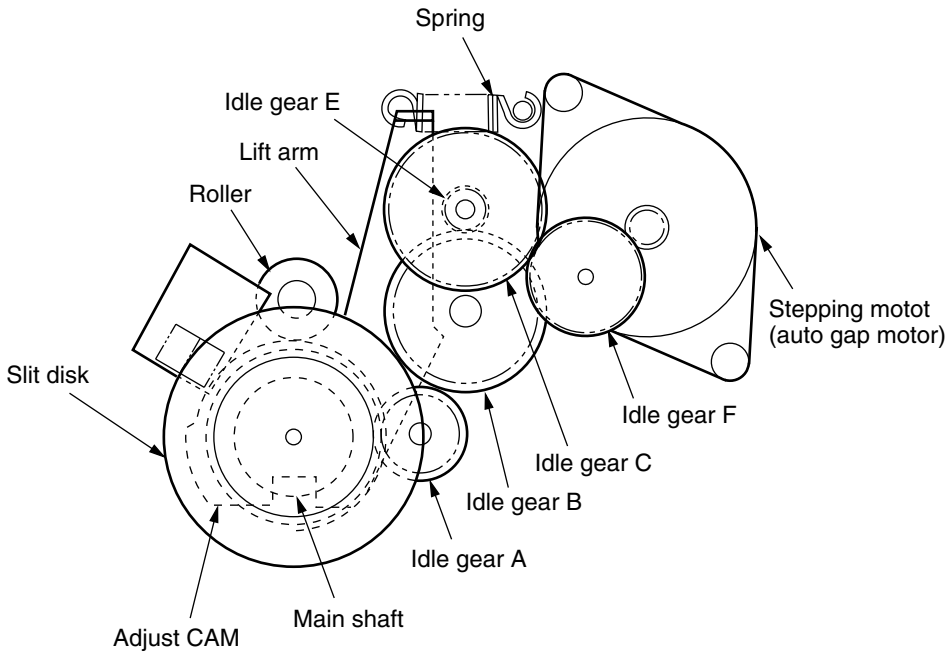

Figure 12-7 Manual Gap Adjusting Mechanism

3) Auto gap adjusting mechanism

This is a mechanism that adjusts the distance between the platen and print head according to the paper thickness automatically. This mechanism is performed by driving the print head up and down with the stepping motor when set at [Auto], and the auto gap adjustment is performed after the rising movement of the print.

The print head rises at power ON or in a shift to on-line due to cover open or paper end detections. The auto gap adjustment is performed when data is received during on-line. After the print head rises, off-line is released and when data is received on-line, the stepping motor moves in the direction to narrow the distance between the print head and platen.

The rotation of the stepping motor moves the main shaft to the platen side (direction that narrows the gap) via the idle gears and adjust CAM. Then, the sensor block makes contact with the paper. When the sensor block warps, the core gap of the auto gap sensor attached on the sensor block changes. When the change in the core gap is detected, the stepping motor stops rotating.

Next, rotate the stepping motor for specified steps in the opposite direction as before and stop it. This operation raises the print head and an appropriate distance from the platen is obtained.

The up/down movement of the print head is performed by counting the number of slit signals release from ϕA, ϕB of the slit sensor of the slit disk attached to the main shaft, and controlling the rotation of the main shaft

The up and down movements of the print head is performed by the rotation of adjust CAM, and the main shaft is constantly pulled toward the upper section of the device by a spring.

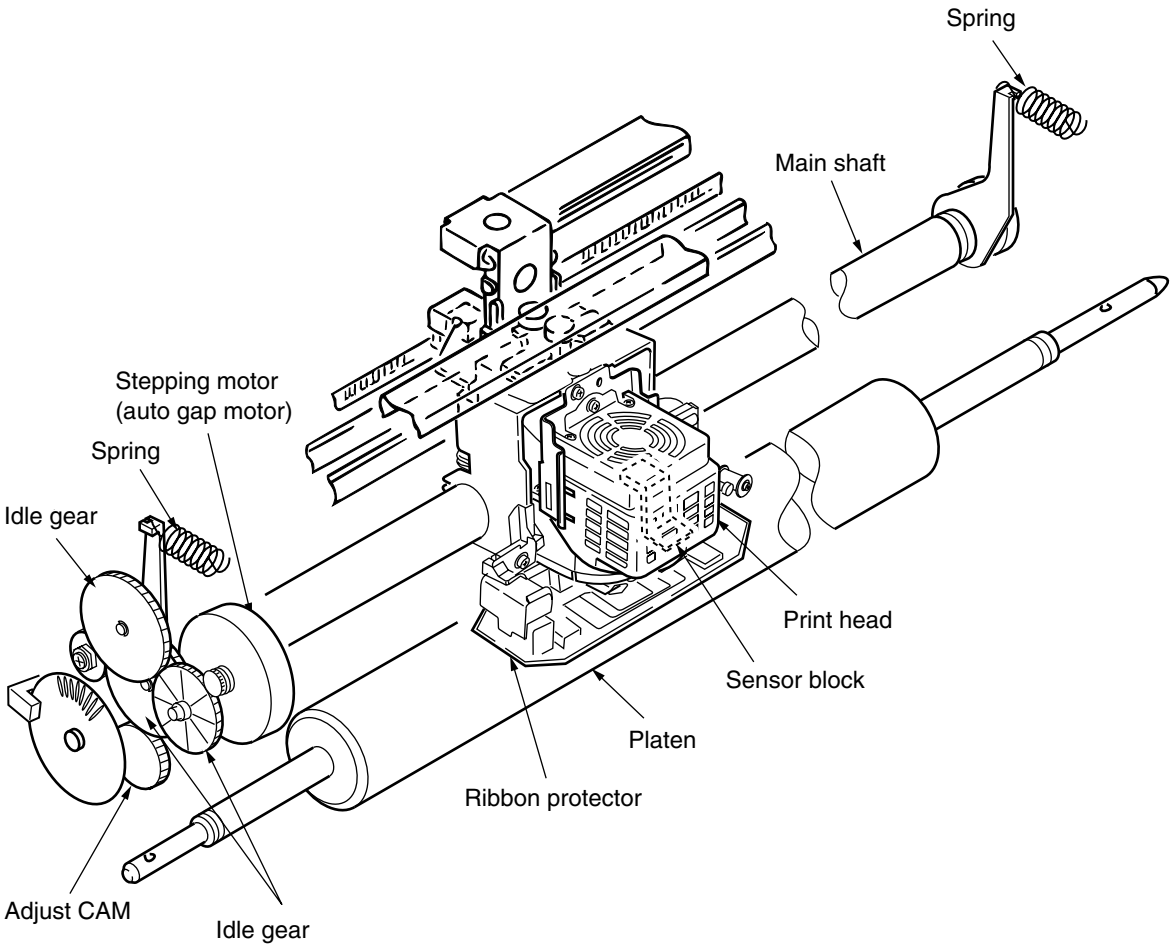

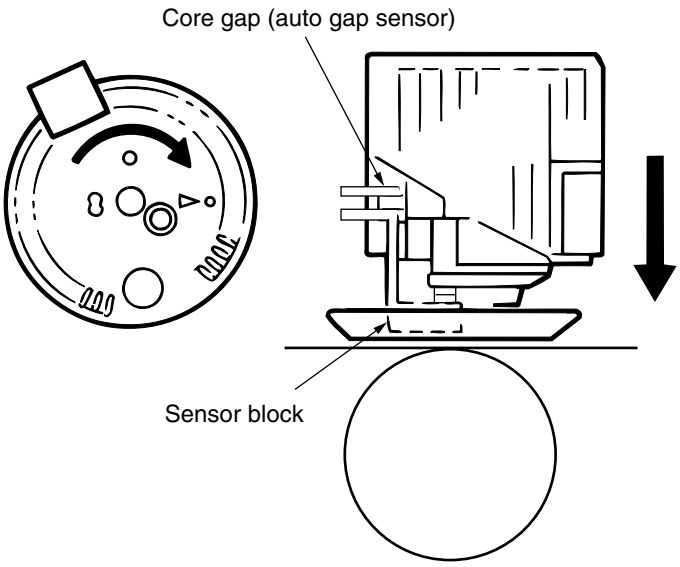

Figure 12-8 Auto Gap Adjusting Mechanism

12.3.5 Paper feed operation (See Figures 12-9, 12-10, 12-11)

The paper feed operation is driven by the stepping motor and is performed by rotating the feed roller, platen, and sheet feeder.

1) Paper feed operation

A stepping motor for line feeding is attached on the left side frame. The rotation from the stepping motor for line feeding is transferred to the platen via the idle gear and platen gear. (The platen decreases its rotating speed against paper feed.)

Rotation to the front tractor is transferred via the idle gear, and rotation to the optional rear tractor is transferred from the motor via the belt, cut-sheet feed roller, rear tractor belt, and idle gear.

Mechanically, it is designed so that a paper is fed 4.23mm when the stepping motor rotates 30 steps. The minimum amount of feed is 021mm which is equivalent to 1.5 steps worth of the stepping motor rotation.

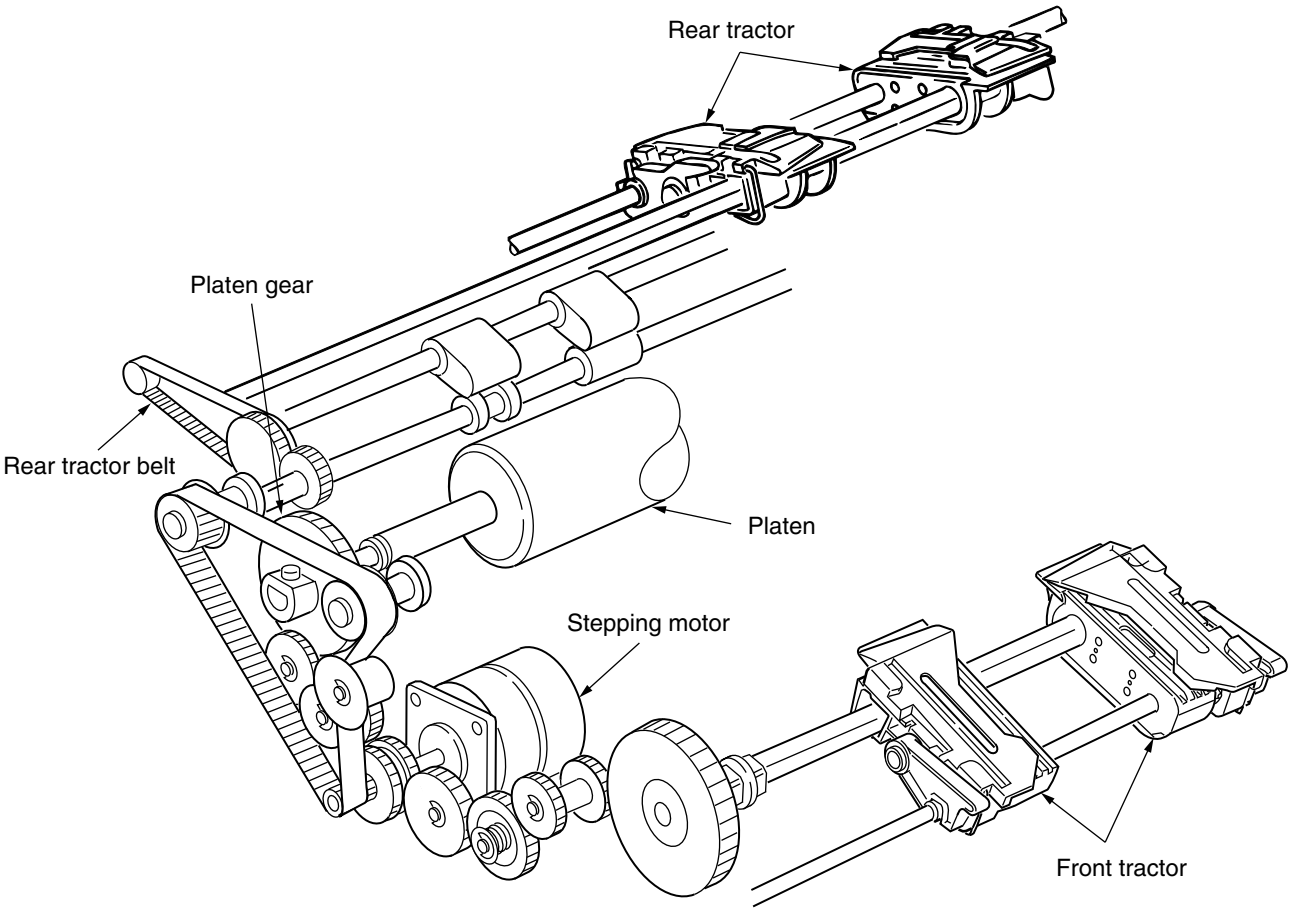

Figure 12-9 Continuous Drive Mechanism (Front Tractor)

2) Cut-sheet, continuous switch mechanism

Cut-sheet and continuous paper are switched by pressing the switches in the operator panel of the printer. When [Manual Feed] is set by pressing the [Path] switch in the operator panel, the continuous/cut-sheet switch motor begins to rotate. By sliding the mode rack by transferring the rotation through the gear and shaft, the mode CAM rotates, Yawing rack is pushed up, and the upper roller is push against the feed roller, thus enabling a cut-sheet to be fed.

By setting [Front Feed], [Rear Feed], [Double Feed] by pressing the mode switch, the mode CAM rotates, lowers the Yawing rack, lifts the upper roller and the pressure of the upper roller is eased.

The spring gears (rear and front) are pushed against the spring, and slide by the dips and bumps of the mode rack. Therefore, rotation of the LF motor is transferred to the front tractor/ rear tractor side, thus enabling continuous paper to be fed.

When the switch to save continuous paper is pressed, the mode CAM rotates, the Yawing rack is lowered by the coil spring, the upper roller is lifted up, thus releasing the pressure of the upper roller and saving the continuous paper.

A sensor attached on the tip of the mode rack detects the position of the mode rack and set the paper mode (media mode).

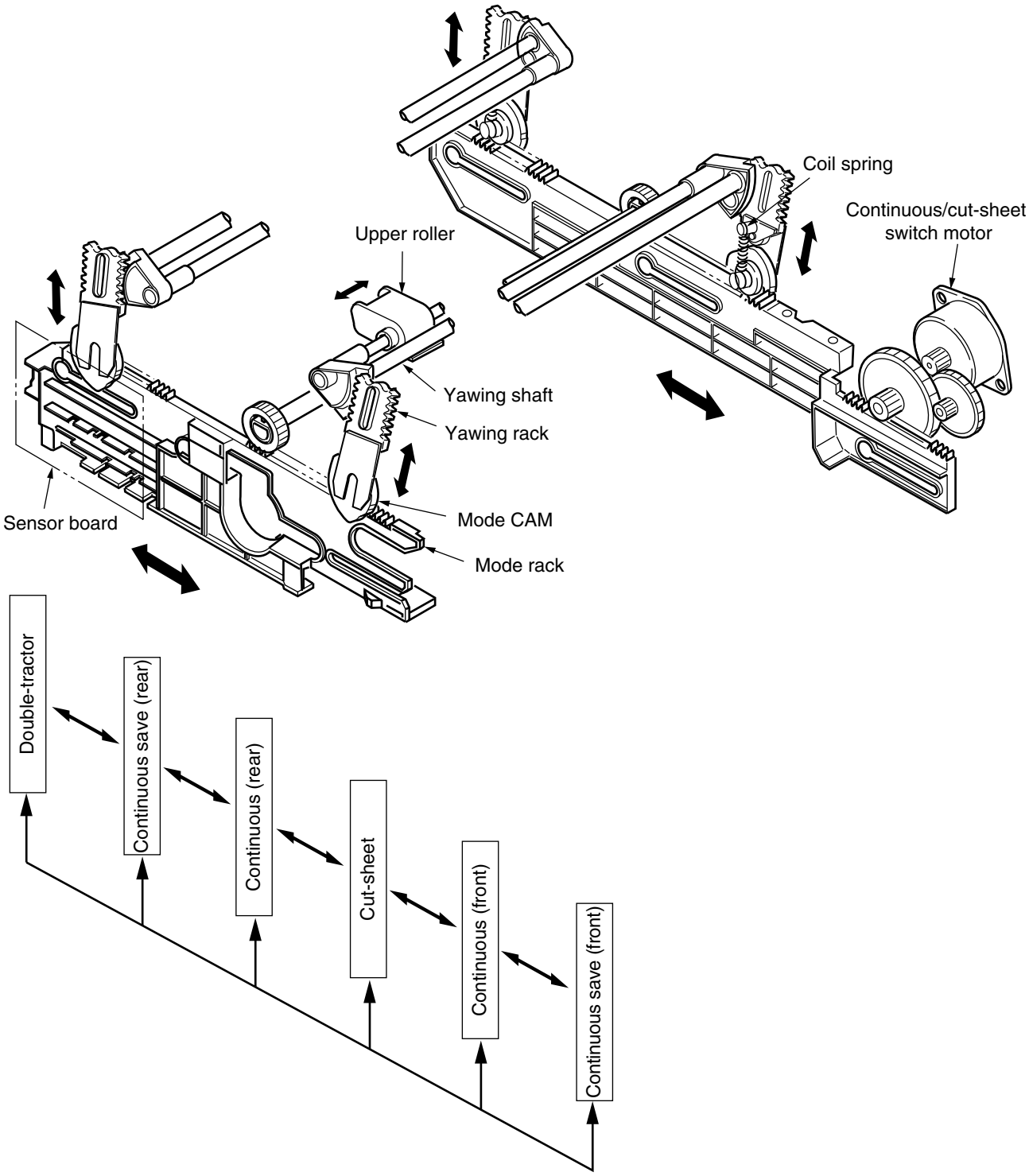
Coil spring
Continuous/cut-sheet switch motor
Upper roller
Yawing shaft
Yawing rack
Sensor board
Mode CAM
Mode rack
Double-tractor
Continuous save (rear)
Continuous (rear)
Cut-sheet
Continuous (front)
Continuous save (front)

Figure 12-10

For Cut-sheet

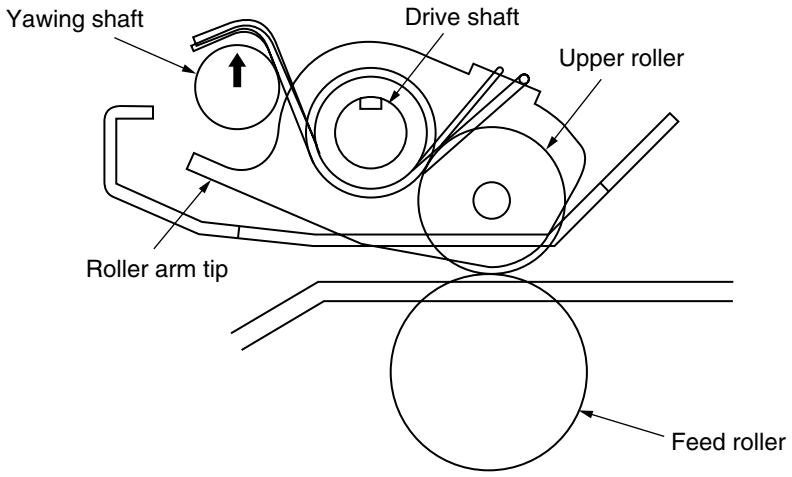

For Continuouse

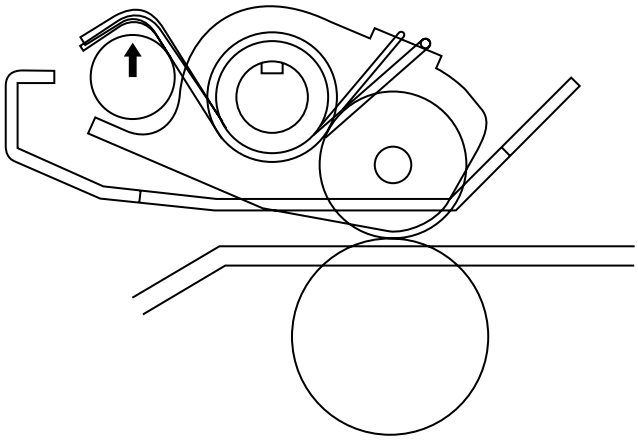

For Open

(When saving continuous)

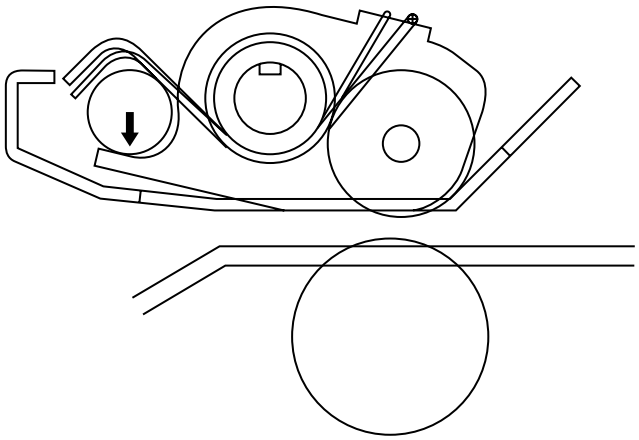

Figure 12-11 Upper Feed Roller

12.3.6 Mechanism of the paper end detection (See Figure 12-12)

A sensor integrated with a photo diode and photo transistor is used to judge whether paper exist or not.

For paper-end, the remaining amount of paper is calculated from the detecting position of this sensor and is compared with the value set in the menu. For CSF and manual feed, a table paper detection sensor is used.

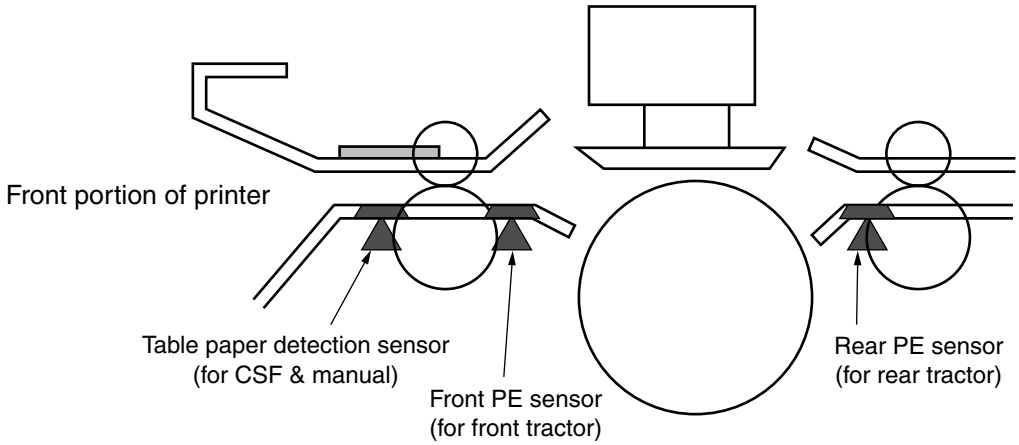

Figure 12-12 Mechanism of Paper End Detection